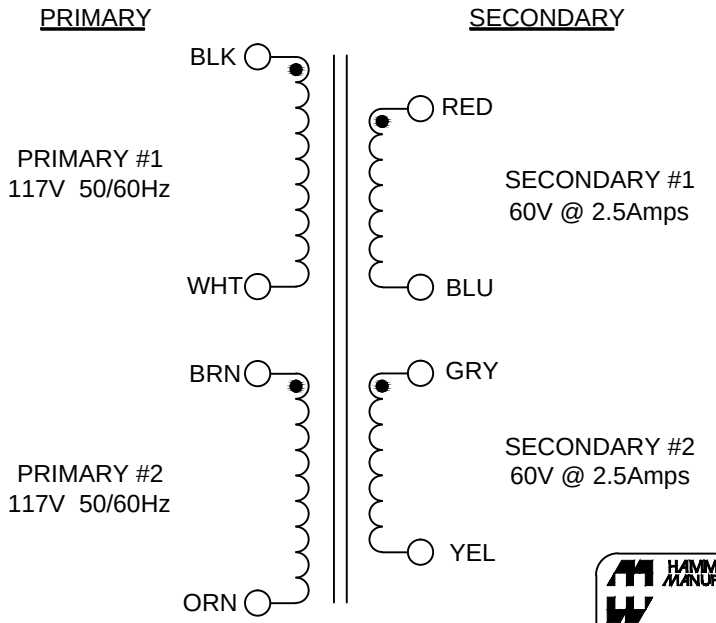

PRIMARY LEADS ARE #20 TEW

SECONDARY LEADS ARE #18 TEW

ALL LEADS OUT 8"-9" AND STRIPPED 0.5" MIN.

WEIGHT: 6.02Lbs +/- 4%

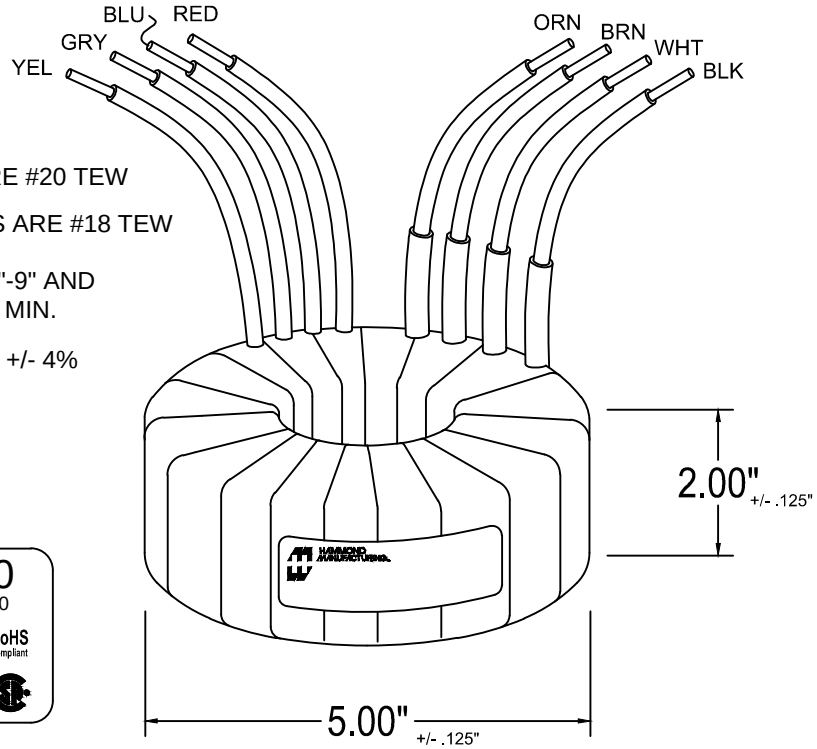

HAMMOND MANUFACTURING

1182L60

50/60Hz VA:300

PRI: 2x 117V BLK-WHT, BRN-ORN

SEC: 2x 60V @ 2.5A RED-BLU, GRY-YEL

RoHS Compliant

1A0300A000C060060

MADE IN CANADA DATE PB

ELECTRICAL DATA:

TESTS	CONDITIONS	ACCEPTANCE CRITERIA
Sec. N.L.V	@ 117V, 60Hz	
	BLK & BRN to WHT & ORN	
OR	@ 234V, 50Hz	
	BLK to ORN (Connect BRN & WHT)	
	RED - BLU	63.64 V ±2%
	GRY - YEL	63.64 V ±2%
POLARITY	BLK, BRN, RED and GRY.	ADDITIVE
DCR	BLK - WHT	1.960 Ohms ±20%
IN OHMS	BRN - ORN	1.960 Ohms ±20%
	RED - BLU	0.580 Ohms ±20%
	GRY - YEL	0.580 Ohms ±20%
HIPOT	PRIMARY - SECONDARY	4000V, 60Hz, 1 SEC
	PRIMARY - PRIMARY	600V, 60Hz, 1 SEC
	SECONDARY - SECONDARY	600V, 60Hz, 1 SEC

SUPPLIED WITH: TWO 0.062" T X 3.75" OD RUBBER WASHERS.
ONE 16GA X 3.56" OD STEEL MOUNTING WASHER.
ONE 1/4-20 BOLT 2.50" LONG WITH A LOCK WASHER AND 1/4-20 HEX NUT.

PROPERTY AND COPYRIGHT NOTICE

THIS DRAWING AND THE INFORMATION IT CONVEYS ARE THE PROPERTY OF HAMMOND MANUFACTURING. IT MAY NOT BE REPRODUCED, TRANSMITTED OR USED IN ANY MANNER WHATSOEVER WITHOUT THE WRITTEN PERMISSION OF HAMMOND MANUFACTURING.

REV	NOTES	BY	DATE

HAMMOND MANUFACTURING
ELECTRONIC DIVISION
52 RANKIN PLACE,
WATERLOO, ONTARIO, N2J 3Z5
PHONE: 519.886.6181 FAX: 519.886.9540

TOROID POWER TRANSFORMER

DRAWN	DATE	NUMBER
G. GRAY	21/03/2014	1182L60
APPROVED	DATE	