Plug Connectors for MCH modules

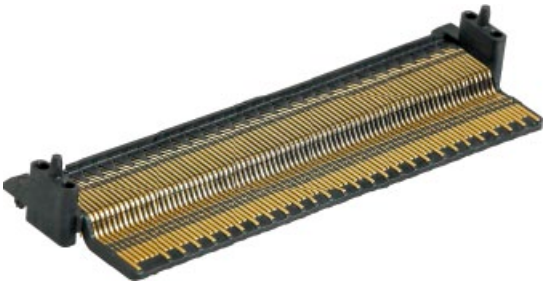

For mounting on extended side

Identification	No. of contacts	Part number
AdvancedMC™ Plug Connector for extended side mounting replacement of former part number 16 21 170 1301 000	170	16 21 170 1303 000
AdvancedMC™ Plug Connector for extended side mounting with nozzle pad for pick and place assembly replacement of former part number 16 21 170 1302 000	170	16 21 170 1304 000
MCH Plug Connector for extended side mounting replacement of former part number 16 22 170 1301 000	170	16 22 170 1303 000
MCH Plug Connector for extended side mounting with nozzle pad for pick and place assembly replacement of former part number 16 22 170 1302 000	170	16 22 170 1304 000
AdvancedMC™ – MCH Plug stacking-pin for extended side mounting		
double length (for two stacked plugs) 11.5 mm		16 79 000 0006 000
triple length (for three stacked plugs) 19 mm		16 79 000 0007 000
quad length (for four stacked plugs) 26.5 mm		16 79 000 0008 000

MCH Plug Connector
for extended side mounting

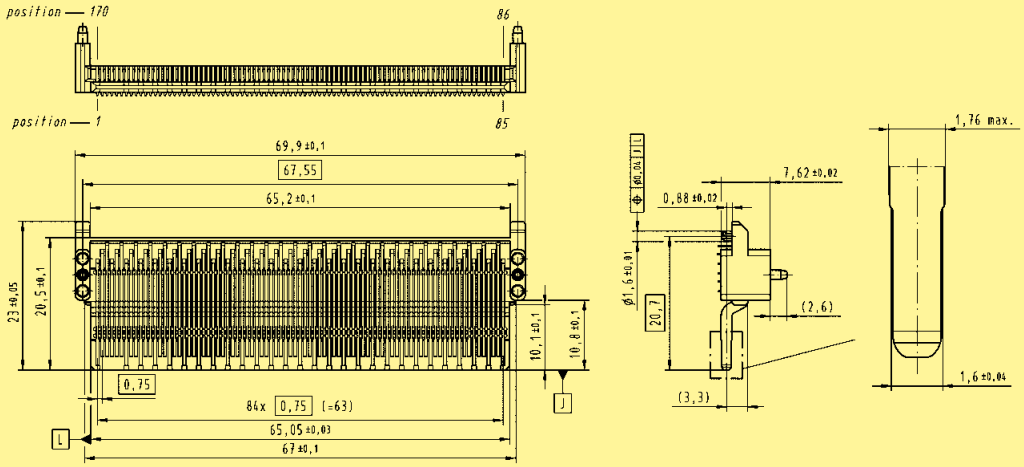

Board drillings
(view of the
extended side /
component side 2)

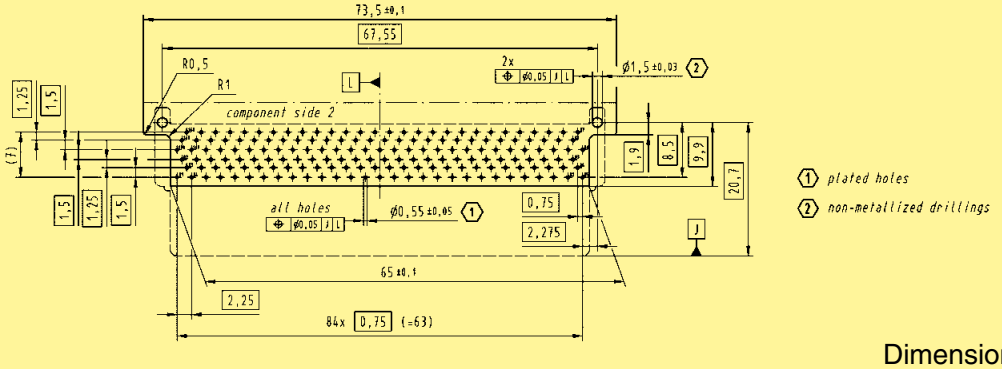

Dimensions [mm]

Dimensions for AdvancedMC™ Plug Connector for extended side mounting see page 25.