DETAIL OF FORCE-FIT PEGS

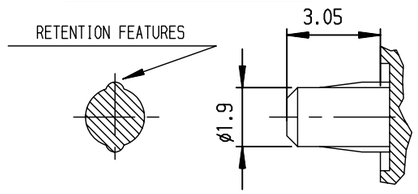

LAYOUT FOR P.C.B
(PER 12mm LENGTH)

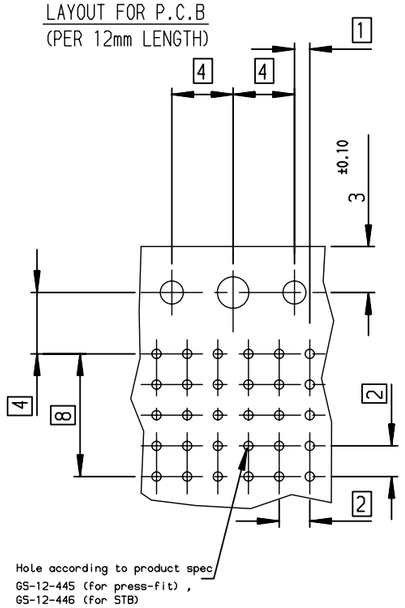

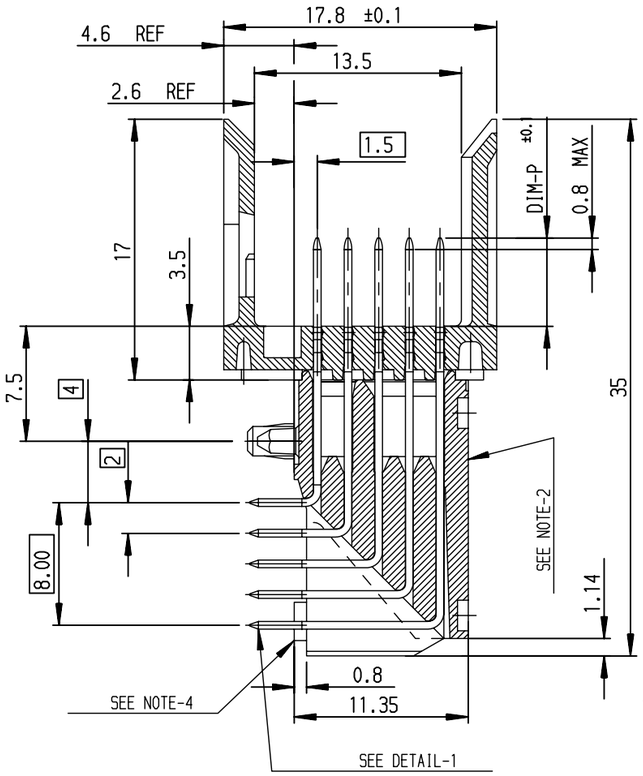

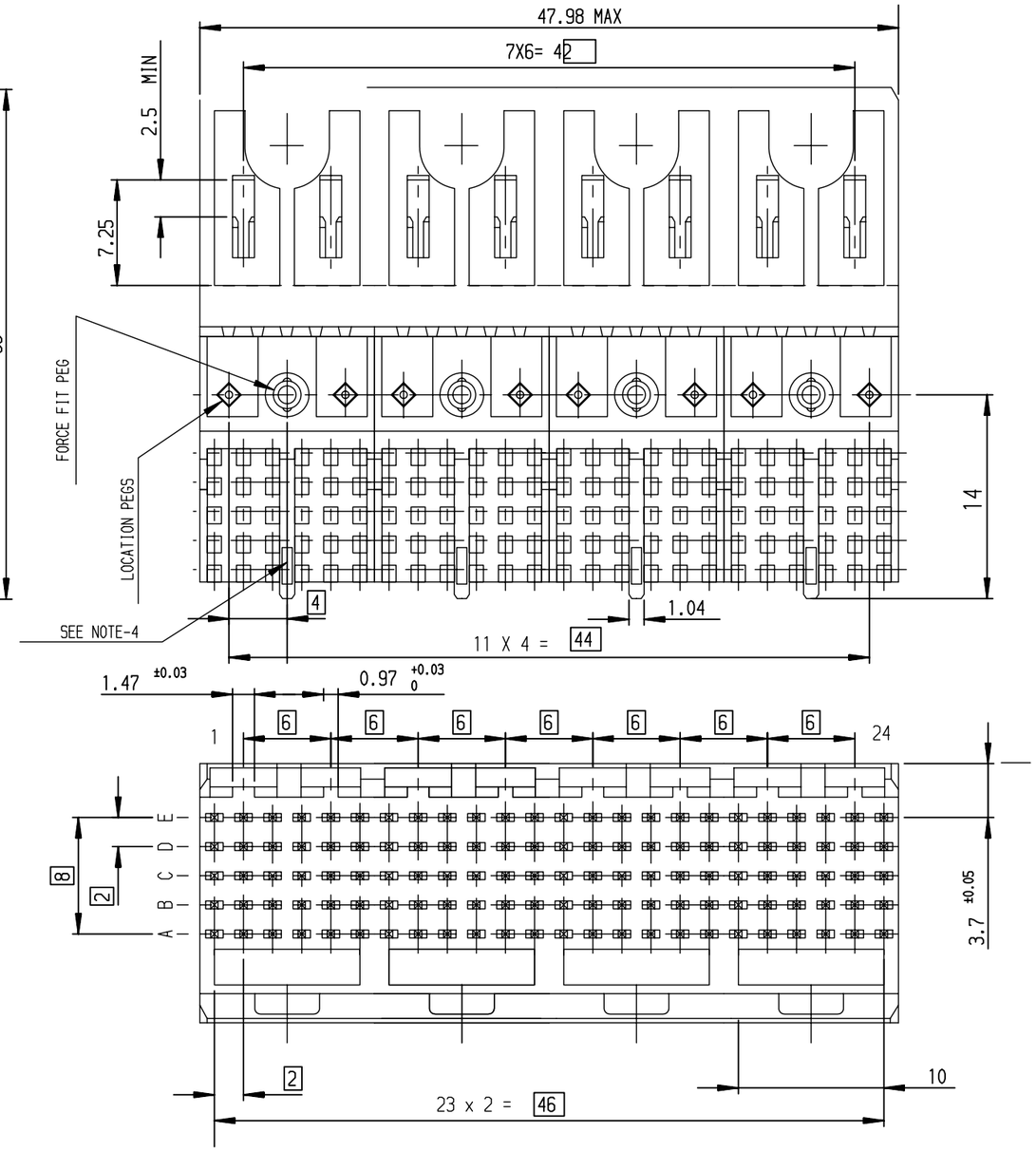

DETAIL-1: PRESS-FIT PIN

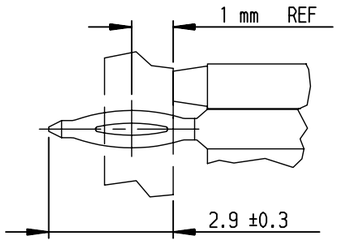

TIN LEAD PART NUMBER

Part Number: HM1L53xDP000Hz

MATING LENGTH DIM-P / REPLACE 'x' BY:

	ROW-A	ROW-B	ROW-C	ROW-D	ROW-E
A =	5.00	5.00	5.00	5.00	5.00
STD → L =	5.75	5.75	5.75	5.75	5.75
D =	6.50	6.50	6.50	6.50	6.50
B =	**6.50**	5.00	5.00	5.00	5.00
C =	6.50	5.75	5.75	6.50	5.75
M =	7.25	7.25	7.25	7.25	7.25
N =	8.00	8.00	8.00	8.00	8.00

LEAD FREE PART NUMBER

Part Number: HM1L53xDP000HzLF

MATING LENGTH DIM-P / REPLACE 'x' BY:

	ROW-A	ROW-B	ROW-C	ROW-D	ROW-E
A =	5.00	5.00	5.00	5.00	5.00
STD → L =	5.75	5.75	5.75	5.75	5.75
D =	6.50	6.50	6.50	6.50	6.50
B =	**6.50**	5.00	5.00	5.00	5.00
C =	6.50	5.75	5.75	6.50	5.75
M =	7.25	7.25	7.25	7.25	7.25
N =	8.00	8.00	8.00	8.00	8.00

GENERAL CHARACTERISTICS AND ROHS INFORMATIONS:
SEE PRODUCT SPECIFICATION GS-12-445

NOTE-2: FLAT ROCK INSERTION TOOLING, ON ALL THIS SURFACE
NOTE-3: EYE OF THE NEEDLE PRESS FIT PIN TYPE
NOTE-4: REAR CENTRAL SUPPORT FOR BETTER ASSY ON PCB
NOTE-5: IF SUFFIX "P" IS ADDED IN P/N PACKAGING IS IN TRAYS
BUT CONNECTOR MARKING IS WITHOUT "P"
EXAMPLE: HM1XXXXXXXXXH6P, MARKED HM1XXXXXXXXXH6

rev	ecn no	dr	date
F	-	GOI	2004/10/14
G	LS05-004	MLE	2005/02/17
H	LS06-0095	LGO	2006/07/10
J	LS07-0184	MLE	2007/07/24
-	-	-	-
-	-	-	-
-	-	-	-

European Views

www.fciconnect.com			surface ISO 1302	tolerance std ISO 406 ISO 1101	projection	mm
			TOLERANCES UNLESS OTHERWISE SPECIFIED			
Dr	CHAMPION	1997/10/28	ANGULAR	LINEAR 0.X ±0.1	size A3	Scale 2.5
Eng	LENOIR	1997/10/28		0.XX ±0.1		
Chr	LEGARE	1997/10/28	0.XX' ±2°	0.XXX ±0.1	ECN	LS07-0184
Appr	LEGARE	1997/10/28	Product family	METRAL	Spec ref	-
title	METRAL RA HEADER 5 ROW STANDARD PRESS-FIT 120 WAY				dwg no	C-8626-0237 Rev. J
catalog no	-				CUSTOMER	sheet 1 of 1

Copyright FCI.