THIS DRAWING IS UNPUBLISHED. RELEASED FOR PUBLICATION 20
© COPYRIGHT 20 BY TYCO ELECTRONICS CORPORATION. ALL RIGHTS RESERVED.

PART NUMBER	REV	FIRST USED	POWER UNIT	FEED TYPE	DESCRIPTION
1855313-1	A	122500-1	LEADMAKER	AIR FEED	CUTS CARRIER
1855313-2	A	565435-5	BENCH MODEL K	AIR FEED	CUTS CARRIER
1855313-3	A	354500-1	BENCH MODEL G	AIR FEED	CUTS CARRIER
1855313-6	A	122500-1	LEADMAKER	AIR FEED	CONTINUOUS CARRIER
7-1855313-7	A	-	-	-	SPARE PARTS

1. RECOMMENDED SPARE PARTS
2. GREASE LIGHTLY
3. GUARD MUST BE IN PLACE WHEN OPERATING APPLICATOR IN A BENCH MACHINE
4. INSTALL ITEMS 101,102 AND 119 ON SIDE OF STRPPER ON APPL HOUSING USING ITEM 21.

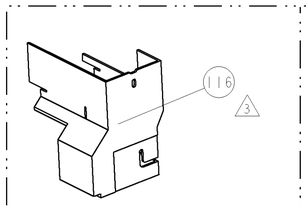

AMP-O-LECTRIC TERM GUARD

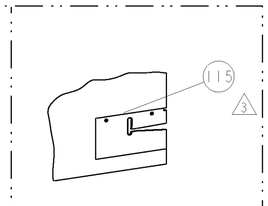

G TERMINATOR GUARD

TERMINAL NAME: MEDIUM RING TERMINAL

TE PN	MANUF PN	PACKARD TERM - PACKARD CRIMP SPECS			
1949429-1	12004436				
-	-	CRIMP HEIGHT		WIRE SIZE	REF SETTING
-	-	3.38±0.05mm[.133±.002]		3mm2	C1
-	-	-		-	-
-	-	-		-	-
-	-	-		-	-
-	-	CRIMP	SIZE	TYPE	RANGE
-	-	WIRE	4.57mm [.180]	F	3.00 mm2
-	-	INSUL	6.35mm [.250]	F	Ø5.3 mm MAX
WIRE STRIP LENGTH 5.71-6.09mm	TERM APPL SPEC NONE	FEED 22.48mm	APPLICATOR INSTRUCTIONS 408-8040 & 408-8490		SET UP GAGE -

LOC	DIST
A	66

REVISIONS

P	LTR	DESCRIPTION	DATE	DWN	APVD
	A	RELEASED	28NOV2007	BH	BH
	-	-	-	-	-

* WARNING
ON INSTALLATION, SET WIRE DISC TO LARGEST WIRE SIZE SETTING. USE OF SETTINGS BELOW MIN. REQUIRED CRIMP HEIGHT SETTING WILL CAUSE DAMAGE TO CRIMP TOOLING.

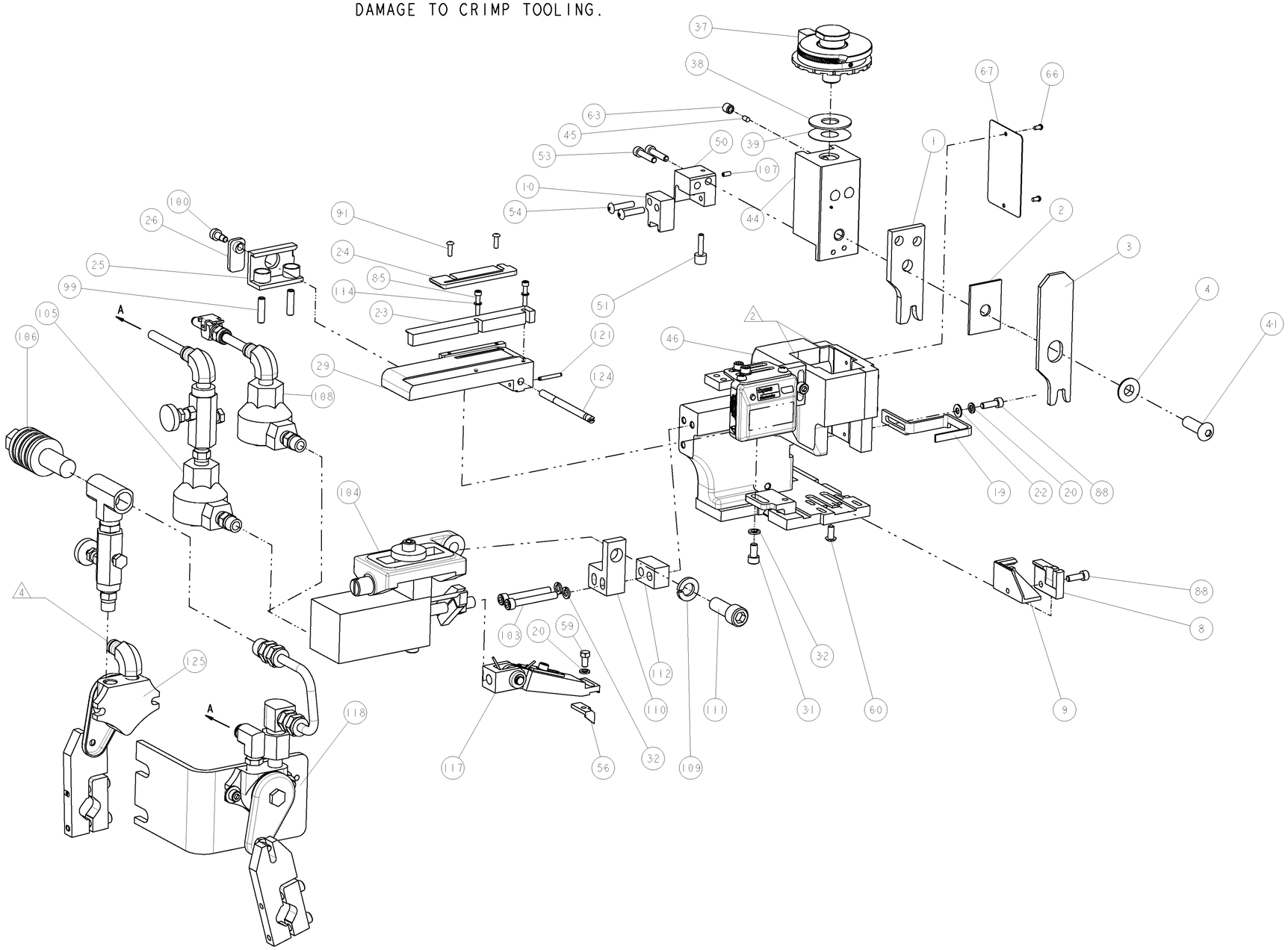

						FEED_FNGR_CNTR_ASM		
-	-	-	1	-	-	455350-4	AIR BLAST ASS'Y	125
-	1	1	1	1	-	690432-3	ADJUSTMENT SCREW	124
-	1	1	1	1	-	4-21028-0	PIN, SLOTTED SPRING .094 X .750	121
-	-	18	24	18	IN	27319-4	TUBING, POLY-FLO, NATURAL	119
-	-	-	1	-	-	692655-6	AIR FEED VALVE ASSEMBLY	118
-	1	1	1	1	-	461062-1	FEED FINGER ASSEMBLY	117
3	-	-	REF	-	..	455749-1	GUARD WINDOW	116
3	-	REF	-	-	..	679532-1	INSERT, GUARD	115
-	2	2	2	2	-	21024-2	WASHER, SPRG LOCK, REG NO 4	114
-	1	1	1	1	-	461690-2	SPACER, AIR FEED	112
-	1	1	1	1	-	3-21001-5	SCR, SKT HD CAP 3/8-16 X 1.000	111
-	1	1	1	1	-	459610-1	MOUNT, FEED BRACKET	110
-	1	1	1	1	-	21024-8	WASHER, SPRG LOCK, REG 3/8	109
-	1	1	-	1	-	692655-7	AIR FEED VALVE ASSEMBLY	108
-	1	1	1	1	-	2-21006-1	SCR, SET, CUP POINT 4-40 X .250	107
-	-	-	1	-	-	24042-2	VALVE, SLEEVE, 3-WAY	106
-	-	-	1	-	-	692655-5	AIR FEED VALVE ASSEMBLY	105
-	1	1	1	1	-	461065-1	ASSEMBLY, AIR FEED	104
-	2	2	2	2	-	4-21000-1	SCR, SKT HD CAP 10-32 X 1.500	103
-	1	1	1	1	-	986220-1	CLAMP, CABLE, BLACK	102
-	1	1	1	1	-	23238-1	INSERT, COUPLING	101
-	1	1	1	1	-	22353-8	SCR, SHLD, SLOT HD, 3/16 DIA	100
-	2	2	2	2	-	5-21006-6	SCR, SET, CUP POINT 10-32 X .750	99
-	2	2	2	2	-	1-21002-4	SCR, BTN SKT HD CAP 4-40 X .375	91
-	2	2	2	2	-	2-21000-7	SCR, SKT HD CAP 8-32 X .500	88
-	2	2	2	2	-	1-21000-6	SCR, SKT HD CAP 4-40 X .625	85
-	1	1	1	1	-	4088040	SF APPL INST 408-8040	72
-	1	1	1	1	-	217238-1	GENERAL INSTRUCTION PKG	71
-	1	1	1	1	-	461264-5	PLATE, IDENTIFICATION	67
-	2	2	2	2	-	21017-2	SCREW, DRIVE	66
-	1	1	1	1	-	21009-2	SCR, SET, SELF LOCKING 1/4-20 X .250	63
-	1	1	1	1	-	22733-8	SCR, BHSC, SELF-LOCKING, 8-32 X .375	60
-	1	1	1	1	-	2-22603-0	SCR, HEX HD CAP 8-32 X .312	59
-	1	1	1	1	-	3-694433-9	FEED PAWL	56
-	2	2	2	2	-	2-21002-4	SCR, BTN SKT HD CAP 8-32 X .750	54
-	2	2	2	2	-	2-21000-9	SCR, SKT HD CAP 8-32 X .750	53
-	1	1	1	1	-	811242-2	BUMPER, HOLD DOWN	51
-	1	1	1	1	-	1583893-9	HOLDER, SLUG BLADE	50
-	1	1	-	-	-	3-240641-8	SPACER	49
-	1	1	1	1	-	1633399-5	APPL., BASIC AIR FEED SUB ASSY	46
-	1	1	1	1	-	690191-1	PLUG,NYLON	45
-	1	1	1	1	-	1-455673-4	RAM, SIDE FEED	44
-	1	1	1	1	-	7-21002-9	SCR, BTN SKT HD CAP 5/16-24 X 1.00	41
-	1	1	1	1	-	690125-1	SHIM SUB-ASSY	39
-	1	1	1	1	-	1-469367-1	SHIM	38
-	1	1	1	1	-	879103-2	FINE ADJUST HEAD ASSEMBLY	37
-	3	3	3	3	-	21024-5	WASHER, SPRG LOCK, REG NO 10	32
-	1	1	1	1	-	3-21000-4	SCR, SKT HD CAP 10-32 X .375	31
-	1	1	1	1	-	3-844048-5	PLATE, REAR STRIP GUIDE	29
-	2	2	2	2	-	1-22284-0	SPRING, COMPRESSION	27
-	1	1	1	1	-	240793-1	LEVER, DRAG RELEASE	26
-	1	1	1	1	-	240792-1	DRAG, TERMINAL	25
-	1	1	1	1	-	1633497-2	REAR STRIP GUIDE	24
-	1	1	1	1	-	2-189124-8	GUIDE, FRONT STRIP	23
-	1	1	1	1	-	21055-6	WASHER, FLAT, REG NO 8	22
-	2	2	2	2	-	21024-4	WASHER, SPRG LOCK, REG NO 8	20
-	1	1	1	1	-	1-456468-1	STRIPPER, SPECIAL	19
1	-	1	1	1	-	1583859-9	BLADE, SLUG	10
1	-	1	1	1	-	1-1633124-3	PLATE, REAR SHEAR	9
1	1	1	1	1	-	1-1633507-3	ANVIL, SPECIAL, COMBINATION	8
-	1	1	1	1	-	238009-1	BLOCK, FL CRIMPER SPACER	4
1	1	1	1	1	-	1633587-1	CRIMPER, INSULATION F	3
-	1	1	1	1	-	1-455888-5	SPACER, CRIMPER	2
1	1	1	1	1	-	1633586-1	CRIMPER, WIRE	1
-77	-6	-3	-2	-1	U/M	PART NO	DESCRIPTION	ITEM NO

THIS DRAWING IS A CONTROLLED DOCUMENT FOR TYCO ELECTRONICS CORPORATION IT IS SUBJECT TO CHANGE AND THE CONTROLLING ENGINEERING ORGANIZATION SHOULD BE CONTACTED FOR THE LATEST REVISION.

DWN B HIGMAN	31JUL2007	tyco Electronics — Tyco Electronics, Harrisburg, PA 17105-3608
CHK B HIGMAN	31JUL2007	
APVD T. BENCHOFF	31JUL2007	NAME: FINE ADJUST SIDE FEED HDM APPLICATOR -
DIMENSIONS: INCHES	TOLERANCES UNLESS OTHERWISE SPECIFIED: 0 PLC ±- ; 1 PLC ±0.1 ; 2 PLC ±0.01 ; 3 PLC ±0.001 ; 4 PLC ±0.0001 ; ANGLES ±-	PRODUCT SPEC -
		APPLICATION SPEC -
MATERIAL - -	FINISH - -	WEIGHT -
		SIZE A1 · CAGE CODE 00779 · DRAWING NO C-1855313 · RESTRICTED TO -
		CUSTOMER DRAWING · SCALE 3:5 · SHEET 1 OF 1 · REV A

CUSTOMER VIEWABLE ASSEMBLY

AMP 4805 REV 31MAR2000

Pro/ENGINEER DRAWING