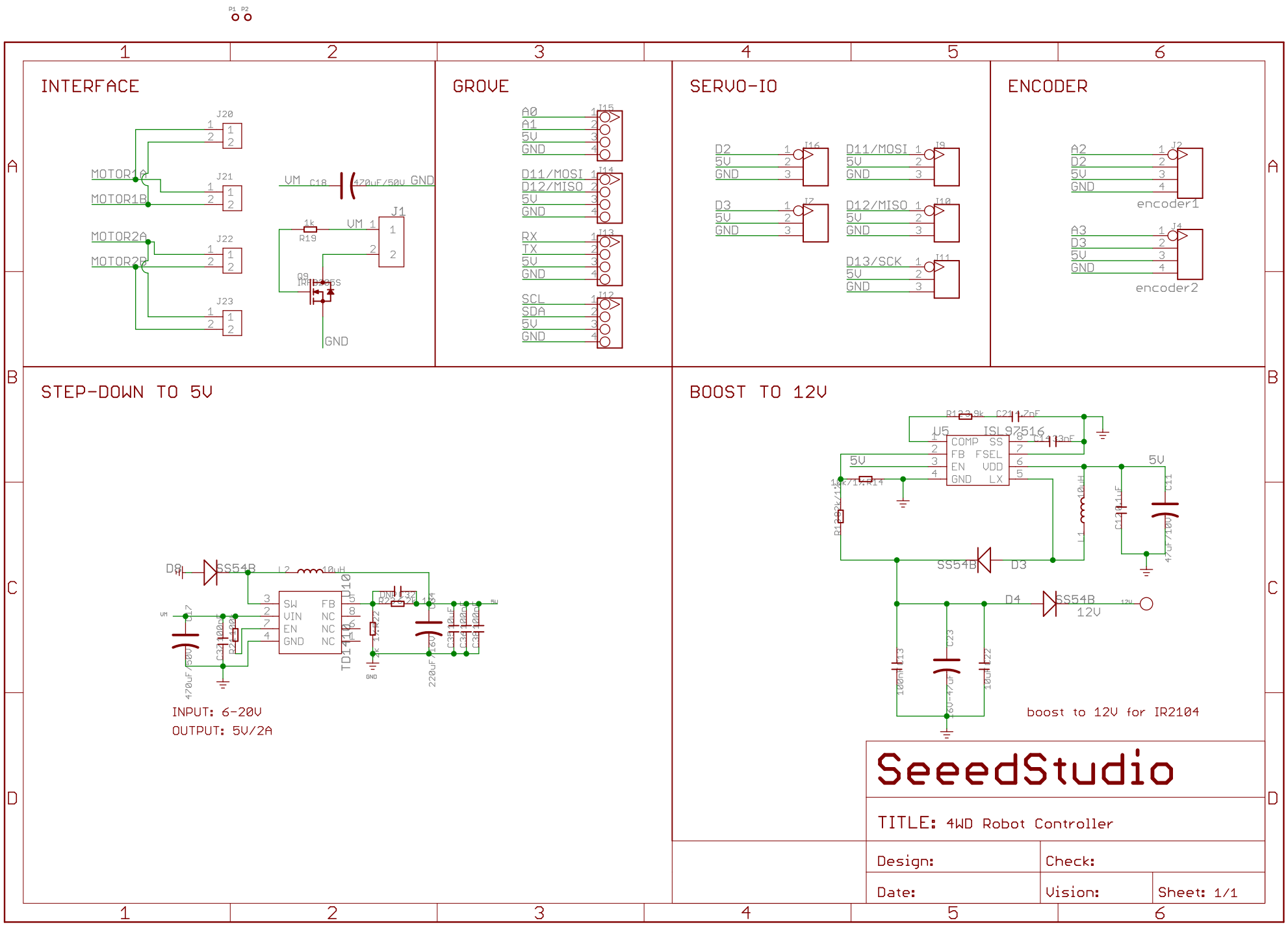
INTERFACE
MOTOR1A
MOTOR1B
MOTOR2A
MOTOR2B
J20
J21
J22
J23
VM
C18
470uF/50V
GND
J1
1k
R19
VM
Q9
GND
GROVE
A0
A1
5V
GND
D11/MOSI
D12/MISO
5V
GND
RX
TX
5V
GND
SCL
SDA
5V
GND
SERVO-IO
D2
5V
GND
D3
5V
GND
D11/MOSI
5V
GND
D12/MISO
5V
GND
D13/SCK
5V
GND
ENCODER
A2
D2
5V
GND
encoder1
A3
D3
5V
GND
encoder2
STEP-DOWN TO 5V
D8
SS54B
L2
10uH
SW
VIN
EN
GND
FB
NC
NC
NC
TD1410
470uF/50V
220uF/6V
INPUT: 6-20V
OUTPUT: 5V/2A
BOOST TO 12V
U5
ISL97516
COMP
SS
FB
FSEL
EN
VDD
GND
LX
5V
5V
L1
10uH
SS54B
D3
D4
SS54B
12V
boost to 12V for IR2104
SeeedStudio
TITLE: 4WD Robot Controller
Design:
Check:
Date:
Vision:
Sheet: 1/1

CONTROLER - ATMEGA168

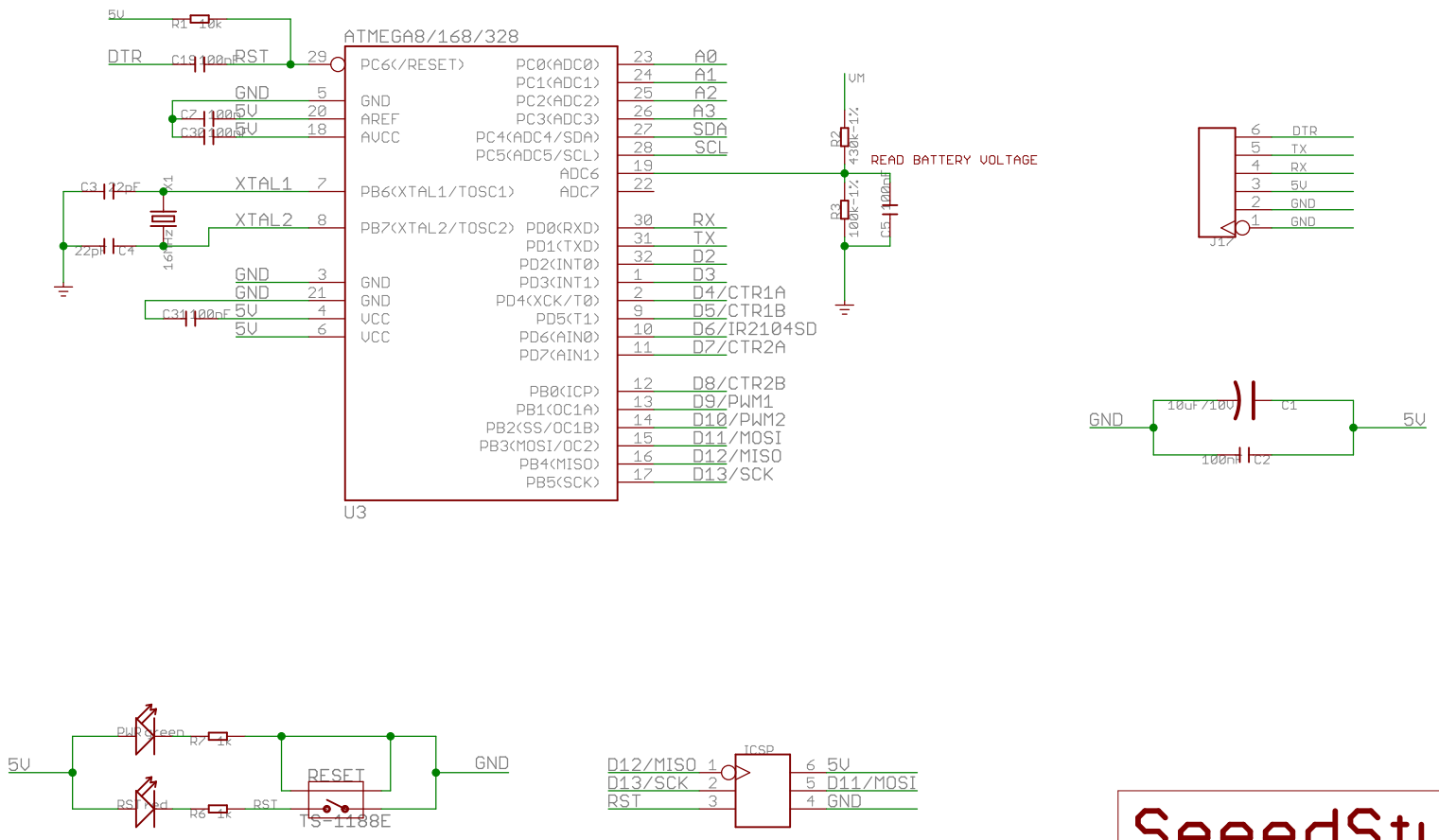

SeeedStudio

TITLE: 4WD Robot Controller

Design:	Check:	
Date:	Vision:	Sheet: 1/1

H-BRIDGE

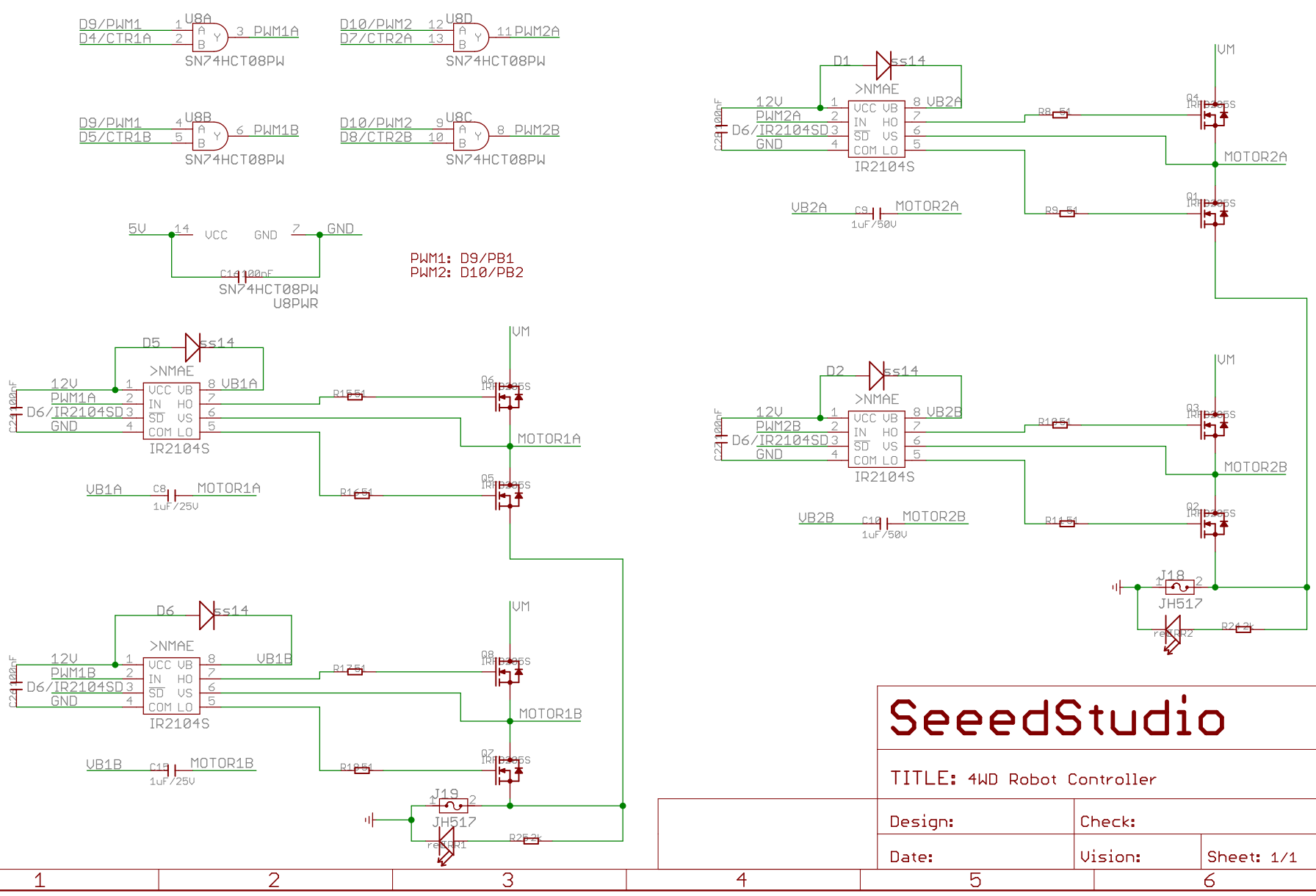

SeeedStudio

TITLE: 4WD Robot Controller

Design:	Check:	
Date:	Vision:	Sheet: 1/1