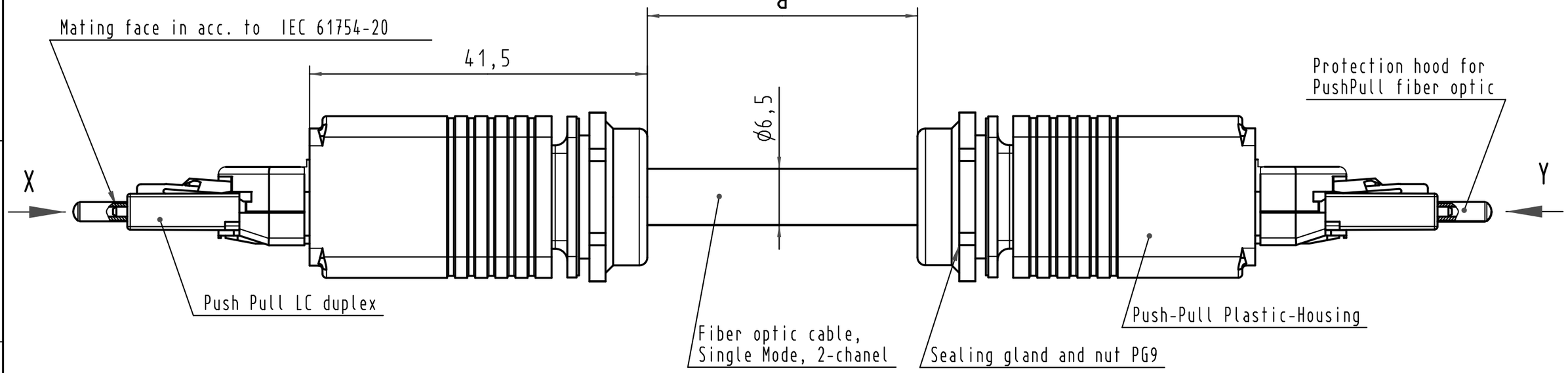

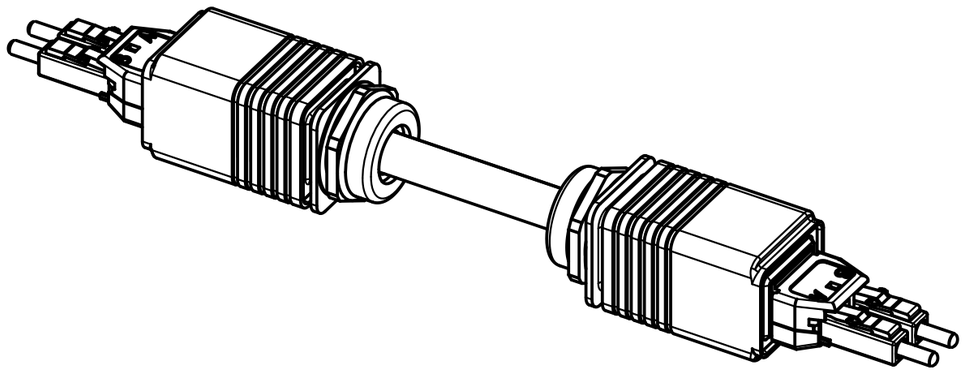

X
(without protection hood)

Loading-Plan

Y
(without protection hood)

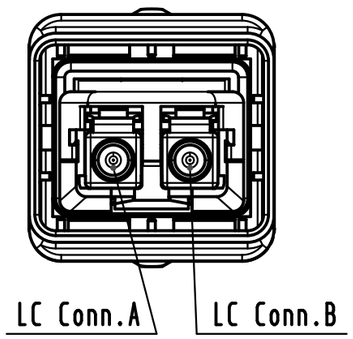

A —— blue —— B
B —— orange —— A

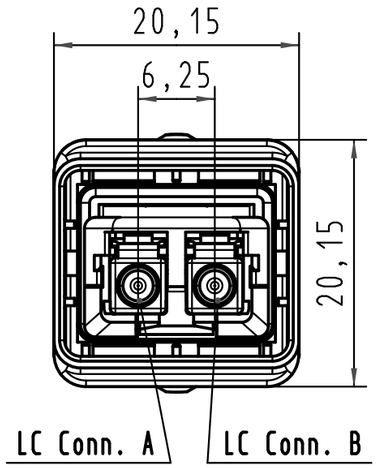

-Protection level: IP67/65
-Temperature range: -40°C ...+70°C

Cont No.	Type of cable	Part-No.	Dim. a
9	High strength fiber optic breakout cable Single Mode	33 58 211 300 0002	300 m
8	High strength fiber optic breakout cable Single Mode	33 58 211 100 0002	100 m
7	High strength fiber optic breakout cable Single Mode	33 58 211 060 0002	60 m
6	High strength fiber optic breakout cable Single Mode	33 58 211 050 0002	50 m
5	High strength fiber optic breakout cable Single Mode	33 58 211 040 0002	40 m
4	High strength fiber optic breakout cable Single Mode	33 58 211 020 0002	20 m
3	High strength fiber optic breakout cable Single Mode	33 58 211 010 0002	10 m
2	High strength fiber optic breakout cable Single Mode	33 58 211 005 0002	5 m
1	High strength fiber optic breakout cable Single Mode	33 58 211 001 0002	1 m

All Dimensions in mm
Original Size DIN A 3

Techn. Character.

Nicht tolerierte Maße/ *Free size tolerances*

Mod.	Dat.	Name
DRS506A	21.05.09	MS
EC00166	17.02.09	MR
35590	13.01.09	MR
35014		

	Dat.	Name
Detail.	20.08.08	MR
Insp.	20.08.08	RA
Stand.		

Maßstab/*Scale* 2:1

HARTING Electronics GmbH & Co. KG
D-32339 ESPELKAMP

PushPull fiber optic assembly
2xPushPull LC DUPLEX, plastic
Single Mode

TB 33 58 211 xxx 0002

Sub. Sub

Blatt/ *page*

Alle Rechte vorbehalten/ *All rights reserved*