PART No. 1418N4ALB6

for more information visit

www.hammfg.com

Data subject to change without notice

Isometric drawing Not to Scale

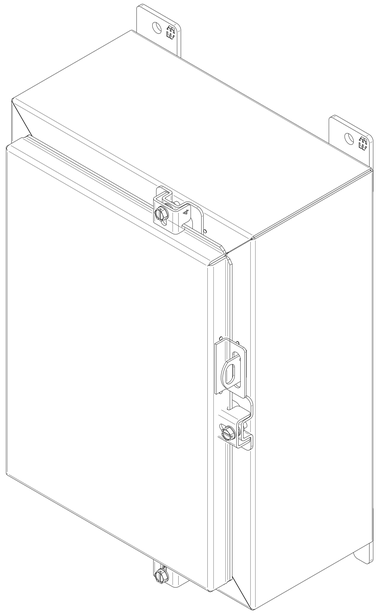

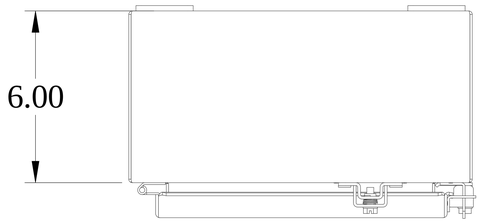

TOP VIEW

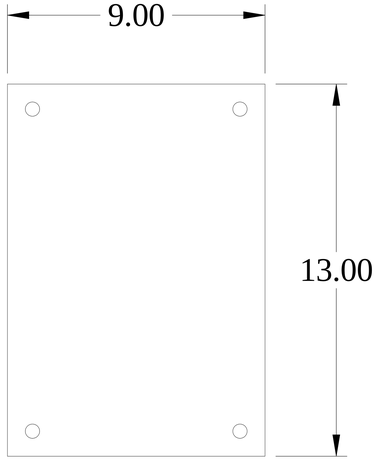

INNER PANEL

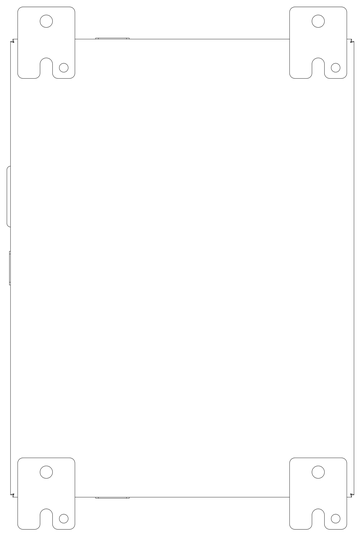

BACK VIEW

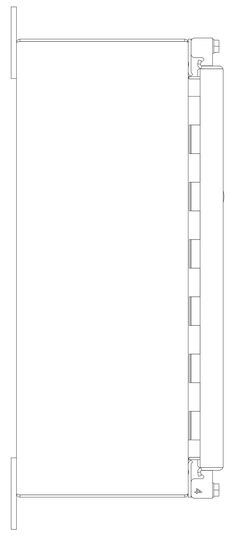

LEFT SIDE VIEW

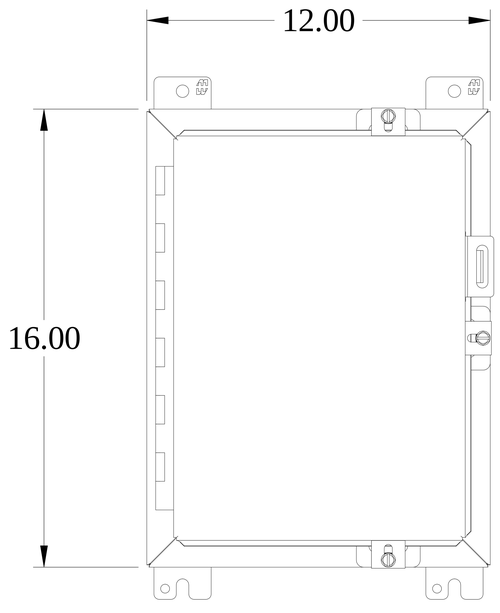

FRONT VIEW

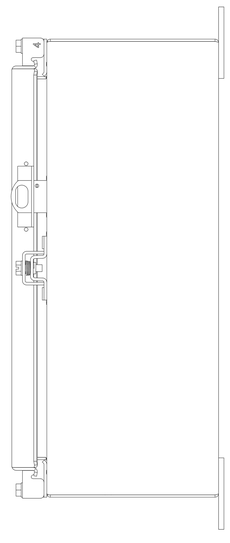

RIGHT SIDE VIEW

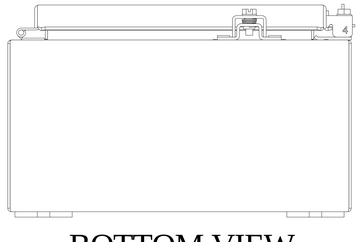

BOTTOM VIEW