THIS DRAWING IS UNPUBLISHED. RELEASED FOR PUBLICATION 20
© COPYRIGHT 20 BY TYCO ELECTRONICS CORPORATION. ALL RIGHTS RESERVED.

PART NUMBER	REV	TERMINATOR	FEED TYPE	DESCRIPTION
1530490-1	1	LEADMAKER	PNEUMATIC FEED	CUTS CARRIER
1530490-2	1	BENCH	PNEUMATIC FEED	CUTS CARRIER
1530490-6	1	LEADMAKER	PNEUMATIC FEED	CONTINUOUS CARRIER
7-1530490-1	1	LEADMAKER	PNEUMATIC FEED	-1 AND SPARE PARTS
7-1530490-2	1	BENCH	PNEUMATIC FEED	-2 AND SPARE PARTS
7-1530490-6	1	LEADMAKER	PNEUMATIC FEED	-6 AND SPARE PARTS
7-1530490-7	1	-	-	SPARE PARTS KIT

SET UP GAGE 458637-3

LOC	DIST
A	66

REVISIONS

P	LTR	DESCRIPTION	DATE	DWN	APVD
	1	DEVELOPMENT	23FEB2011	RS	SX

CRIMP DATA — TE TERMINAL — TE CRIMP SPECS (5) (6)

TERMINAL NAME: FEMALE TERMINAL 0.50/0.75mm²

CRIMP	SIZE	TYPE	RANGE
WIRE	1.78 [.070 IN]	F	0.50-0.75mm²
INSUL	1.73 [.068 IN]	S	Ø1.60-1.90 [.063-.075 IN]

WIRE STRIP LENGTH 4.40 [.173 IN]

APPL INSTRUCTIONS 411-3283

TERMINAL APPL SPEC 114-13060 - - -

FEED 8.00 [.315 IN]

TERMINALS APPLIED

TE PN	-	-	-
1393365-1	1438299-3	-	-
1393365-2	1438299-4	-	-
1393366-1	-	-	-
1393366-2	-	-	-

WIRE SIZE	CRIMP HEIGHT *	REF SETTING *
0.75mm²	1.10 ±0.05 [.043 ±.002 IN]	B1
0.50mm²	1.02 ±0.05 [.040 ±.002 IN]	B8
-	-	-
-	-	-
-	-	-
-	-	-
-	-	-
-	-	-
-	-	-
-	-	-
-	-	-
-	-	-

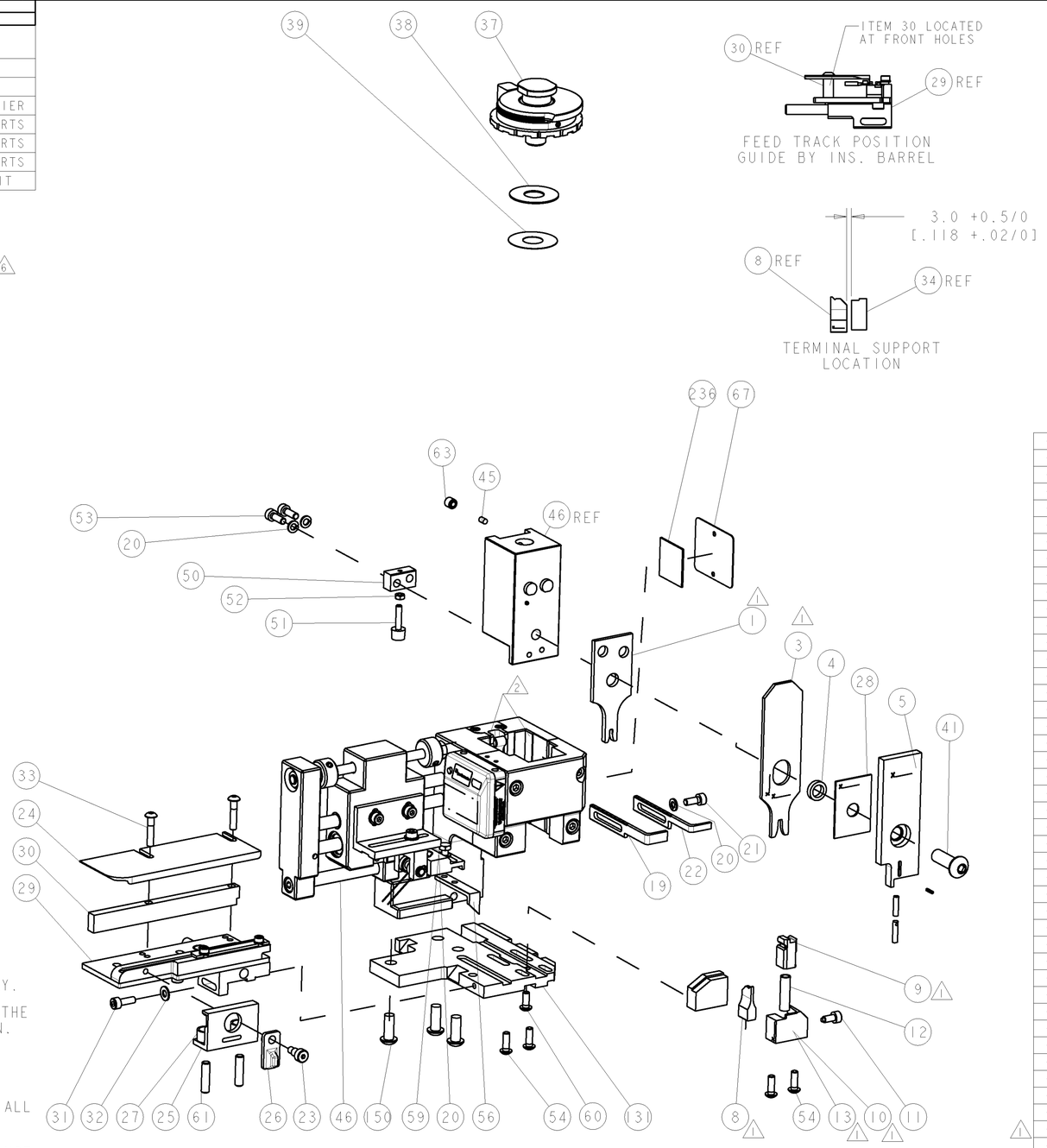

(1) RECOMMENDED SPARE PARTS.

(2) GREASE RAM, CAM, CAM FOLLOWER AND FEED ROD LIGHTLY.

(3) CERTAIN TERMINALS REQUIRE LUBRICATION. REFER TO THE APPLICATOR INSTRUCTION SHEET FOR MORE INFORMATION.

4. LUBRICATE DAILY PER THE APPLICATOR INSTRUCTION SHEET SUPPLIED WITH THE APPLICATOR.

(5) INSULATION CRIMP HEIGHT NOT TO EXCEED 2.10mm FOR ALL WIRE SIZES.

(6) WIDTH OF TERMINAL, ALONG ITS ENTIRE LENGTH, MUST NOT EXCEED 2.05mm.

-	AR	AR	AR	AR	AR	AR	982057-2	TAPE, FOAM	236
-	3	3	3	3	3	3	994988-1	SCR, BTN SKT HD CAP M6X16.0 W/NYLOK	150
-	1	1	1	1	1	1	1320992-1	PLATE, BASE	131
-	1	1	1	1	1	1	1-22278-0	SPRING, COMPRESSION	77
-	1	1	1	1	1	1	854769-1	HOLDER, INS	74
-	1	1	1	1	1	1	1338705-8	DOCUMENTATION PACKAGE	71
-	1	1	1	1	1	1	1-461264-0	PLATE, IDENTIFICATION	67
-	1	1	1	1	1	1	3-18031-0	SCR, SET, CUP POINT M6 X 6.0	63
-	2	2	2	2	2	2	2-18032-5	SCR, SET, FLT POINT M5 X 20.0	61
-	1	1	1	1	1	1	18024-7	SCR, BTN SKT HD CAP (M4 X 10.0)	60
-	1	1	1	1	1	1	5-18022-2	SCR, HEX HD CAP M4 X 8.0	59
-	1	1	1	1	1	1	21028-2	PIN, SLOTTED SPRING .062 X .250	58
-	1	1	1	1	1	1	1338685-1	PAWL, FEED	56
-	4	4	4	4	4	4	18024-8	SCR, BTN SKT HD CAP (M4 X 12.0)	54
-	2	2	2	2	2	2	1-18023-2	SCR, SKT HD CAP M4 X 12.0	53
-	1	1	1	1	1	1	18030-1	NUT, HEX, REG M3	52
-	1	1	1	1	1	1	811242-5	BUMPER, HOLD DOWN	51
-	1	1	1	1	1	1	690753-2	SPACER, TONKER	50
-	1	1	1	1	1	1	1333303-1	ASSEMBLY, AIR FEED	46
-	1	1	1	1	1	1	690191-1	PLUG,NYLON	45
-	-	-	-	-	-	-	-	-	44
-	1	1	1	1	1	1	2-18024-6	SCR, BTN SKT HD CAP (M8 X 25.0)	41
-	1	1	1	1	1	1	690125-1	SHIM SUB-ASSY	39
-	1	1	1	1	1	1	469367-8	SHIM	38
-	1	1	1	1	1	1	879103-3	FINE ADJUST HEAD ASSEMBLY	37
-	1	1	1	1	1	1	1333246-2	SUPPORT, TERMINAL	34
-	2	2	2	2	2	2	1-18024-0	SCR, BTN SKT HD CAP (M4 X 20.0)	33
-	1	1	1	1	1	1	18027-2	WASHER, FLAT, REG M4	32
-	1	1	1	1	1	1	1-18023-2	SCR, SKT HD CAP M4 X 12.0	31
-	1	1	1	1	1	1	1320908-4	SPACER, STRIP GUIDE	30
-	1	1	1	1	1	1	1-1633073-7	STRIP GUIDE ASSEMBLY	29
-	1	1	1	1	1	1	455888-8	SPACER, CRIMPER	28
-	2	2	2	2	2	2	1-22284-0	SPRING, COMPRESSION	27
-	1	1	1	1	1	1	356835-1	LEVER, DRAG RELEASE	26
-	1	1	1	1	1	1	240792-1	DRAG, TERMINAL	25
-	1	1	1	1	1	1	1320928-3	PLATE, STRIP GUIDE	24
-	1	1	1	1	1	1	980371-4	SCR, SKT HD SHLDR 5.0 DIA X 6.0	23
-	1	-	1	1	-	1	690472-2	STRIPPER	22
-	1	1	1	1	1	1	1-18023-1	SCR, SKT HD CAP M4 X 10.0	21
-	4	4	4	4	4	4	18025-2	WASHER, SPRG LOCK, REG M4	20
-	-	1	-	-	1	-	690472-1	STRIPPER	19
(1) -	1	-	-	1	-	-	1338684-1	SHEAR HOLDER, FRONT	13
-	1	1	1	1	1	1	3-22280-3	SPRING, COMPRESSION	12
-	1	1	1	1	1	1	356885-4	STOP, SHEAR	11
(1) -	-	1	1	-	1	1	1320921-1	SHEAR HOLDER, FRONT, CUT	10
(1) -	1	1	1	1	1	1	454276-1	FLOATING SHEAR, FRONT	9
(1) 1	2	2	2	1	1	1	1333231-1	ANVIL, COMBINATION, SPECIAL	8
-	-	-	-	-	-	-	-	-	7
-	-	-	-	-	-	-	-	-	6
-	1	1	1	1	1	1	854772-1	DEPRESSOR, SHEAR	5
-	1	1	1	1	1	1	4-238011-0	BLOCK, CRIMPER SPACER	4
(1) 1	2	2	2	1	1	1	9-683453-9	CRIMPER, INSULATION PREMIUM	3
-	-	-	-	-	-	-	-	-	2
(1) 1	2	2	2	1	1	1	5-562108-2	CRIMPER, WIRE, F	1
-77	-76	-72	-71	-6	-2	-1	PART NO	DESCRIPTION	ITEM NO

* WARNING
ON INSTALLATION, SET WIRE DISC TO LARGEST WIRE SIZE SETTING. USE OF SETTINGS BELOW MIN. REQUIRED CRIMP HEIGHT SETTING WILL CAUSE DAMAGE TO CRIMP TOOLING.

PROTOTYPE DESIGN NOT RELEASED FOR PRODUCTION

THIS DRAWING IS A CONTROLLED DOCUMENT OF TYCO ELECTRONICS CORPORATION. IT IS SUBJECT TO CHANGE AND THE CONTROLLING ENGINEERING ORGANIZATION SHOULD BE CONTACTED FOR THE LATEST REVISION.

DIMENSIONS: mm [IN]

TOLERANCES UNLESS OTHERWISE SPECIFIED: 0 PLC ±; 1 PLC ±; 2 PLC ±; 3 PLC ±; 4 PLC ±; ANGLES ±

MATERIAL - -

FINISH - -

DWN R. SHEN	23FEB2011	TE CONNECTIVITY Harrisburg, PA 17105-3608
CHK L. GROSS	23FEB2011	
APVD T. SUN	23FEB2011	NAME FINE ADJUST SIDE FEED HDI APPLICATOR
PRODUCT SPEC		-
APPLICATION SPEC	See Table	SIZE A1 · CAGE CODE 00779 · DRAWING NO C-1530490 · RESTRICTED TO -
WEIGHT	-	
CUSTOMER ACCESSIBLE PRODUCTION DRAWING		SCALE 3:5 · SHEET 1 OF 1 · REV 1

PRELIMINARY