THIS COPY IS PROVIDED ON A RESTRICTED BASIS AND IS NOT TO BE USED IN ANY WAY DETRIMENTAL TO THE INTERESTS OF PANDUIT CORP.

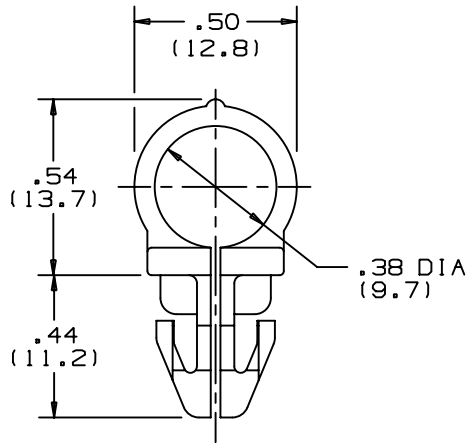

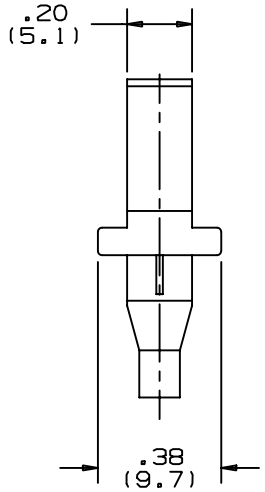

PANDUIT PART NUMBER	MAXIMUM CABLE DIAMETER	PANEL DIMENSIONS		WEIGHT
		THICKNESS	HOLE SIZE	LBS. (g) /100 PCS.
SICH38	.38 (9.7)	.03/.10 (0.8/2.5)	.250 (6.4)	.15 (69)

NOTES:

1. SEE CURRENT PRICE SHEET FOR PART NUMBER SUFFIX DESIGNATION FOR PACKAGE SIZE AND PART COLOR.

(DIMENSIONS IN PARENTHESES ARE METRIC)

CAD FILENAME/LAYERS: G0239JL_PB_SICH38_00

PANDUIT CORP. TINLEY PARK, ILLINOIS

SNAP-IN CLIP
SICH38

UNLESS OTHERWISE SPECIFIED, DIMENSIONAL TOLERANCES ARE:
(.X) ± N/A (.XXX) ± .010 (.25)
(.XX) ± .02 (.5) ANGLES ± N/A

UNLESS OTHERWISE SPECIFIED, ALL DIMENSIONS ARE GIVEN IN INCHES, THIRD ANGLE PROJECTION.

DRAWN BY: LGG
DATE: 9-4-02
CHK'D:
MAT'L: NYLON 6/6
SCALE: 2/1
DRAWING NO.: GB0239JL
DWG SIZE: A

REV	DATE	BY	CHK	DESCRIPTION	ECN - R	CUST	SUP
R	9-4-02	LGG		INITIAL RELEASE. REPLACED G-00841	GB0239JL R		