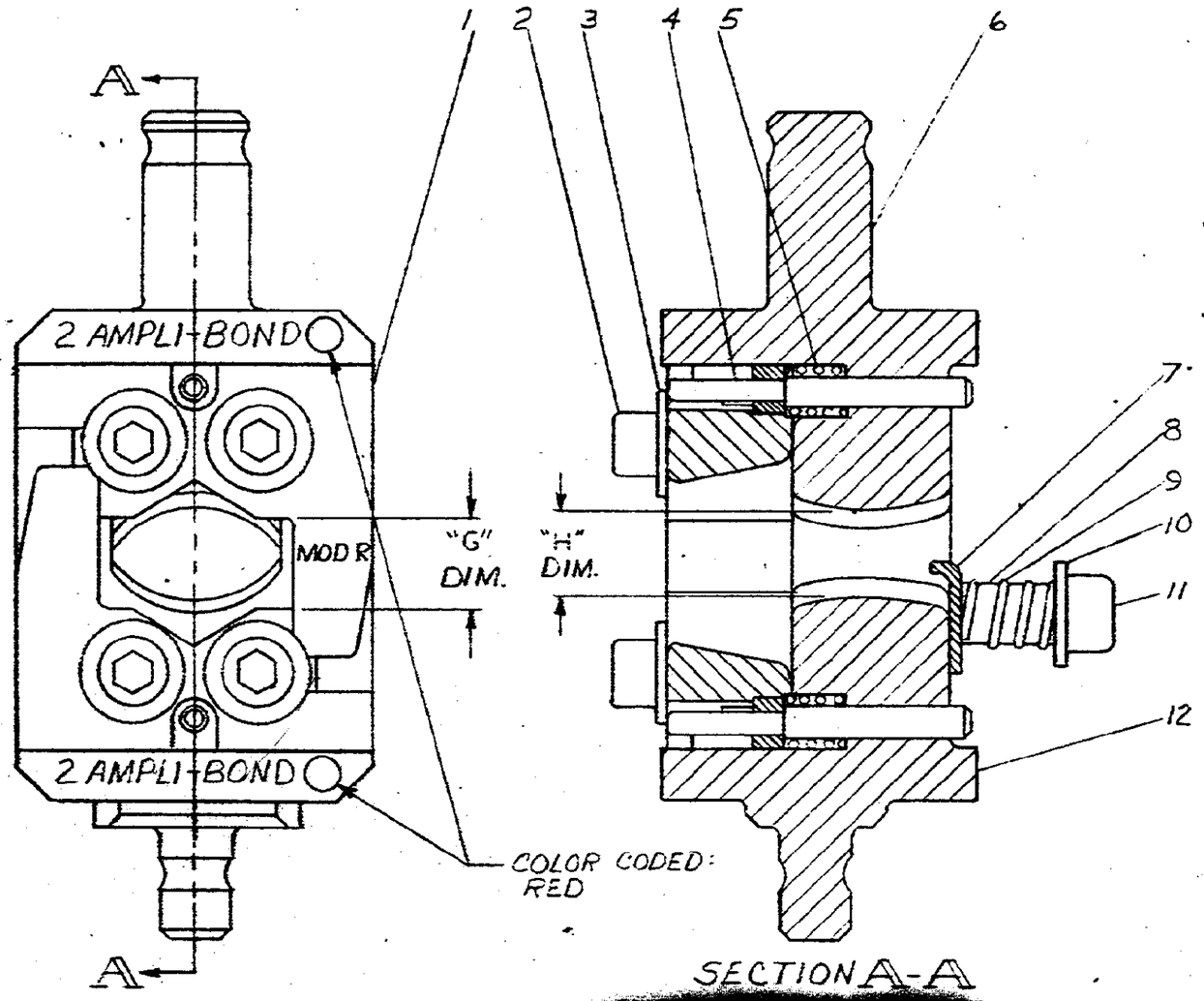

SECTION A-A

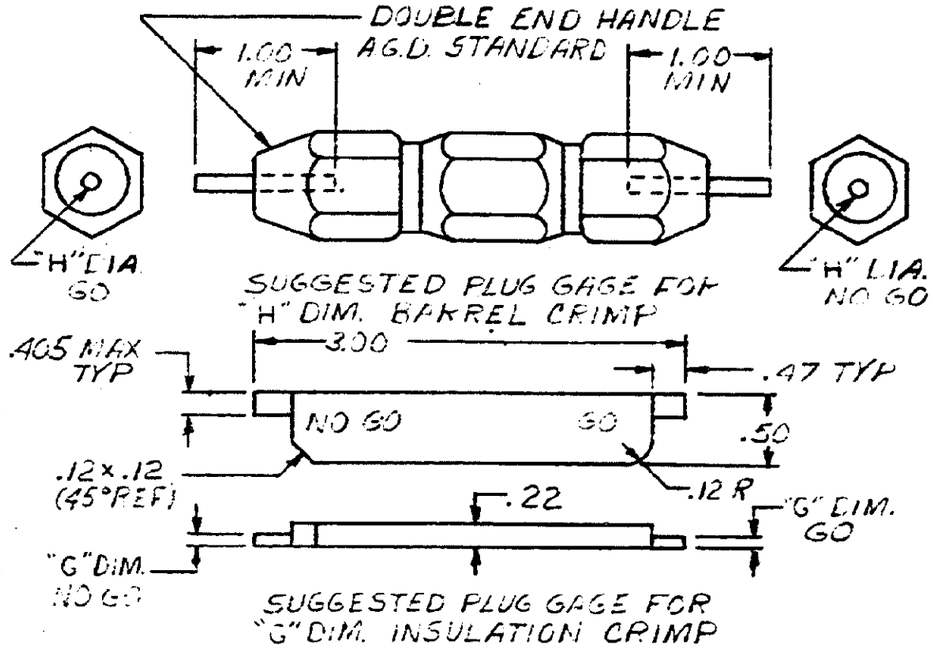

DWG SIZE	NUMBER	NAME	REMARKS	ITEM NO
1	306385-4	INDENTER		12
2	2-21000-8	SCREW (8-32 UNC-3A × .625 LONG)		11
2	21055-6	WASHER		10
2	6-59683-8	SPRING		9
2	306363	SLEEVE		8
1	307130-3	LOCATOR		7
1	306384-4	ANVIL		6
2	302380	SPRING		5
2	301905	ADJUSTMENT KEY ASSY		4
4	306098-3	WASHER		3
4	4-23657-5	SCREW (6-32 UNC-3A × 1.000 LONG)		2
2	301904	INSULATION-INSERT		1

CRIMP DIMENSIONS			
"G" WITH KEYS AT #1		"H" DIM.	
GO	NO GO	GO	NO GO
.182	.202	.319	.325

PLUG GAGE DIMENSIONS APPLY WHEN TOOL IS BOTTOMED BUT NOT UNDER PRESSURE.

[redacted]

LTR	REVISION RECORD	DR	CHK	DATE
R-1	REVISED.	BS	EJF	4-2-71

NUMBER 48755

REQUIRED PER ASSEMBLY

DESCRIPTION

©1968 BY AMP INCORPORATED. ALL RIGHTS RESERVED. AMP PRODUCTS COVERED BY PATENTS AND/OR PATENTS PENDING.

CUSTOMER COPY REFERENCE ONLY

DR A. J. Flaynek 8-19-68

CHK K. J. Frequency 8-20-68

DE

K. J. Frequency 8-20-68

MATERIAL AND FINISH —"—

WIRE — RANGE — INSULATION 2 1

TOLERANCE EXCEPT AS NOTED ± .015 ± 1° 0'

SCALE 2~1

AMP INCORPORATED HARRISBURG, PENNA.

CLASS —"—

TYPE AMPLI-BOND HOUR GLASS PRE-INSUL DIAMOND GRIP

LOC M | B | NO 48755 | REV R-1

NAME DIE ASSEMBLY MOD R

DIMENSIONS IN INCHES. DO NOT SCALE PRINT