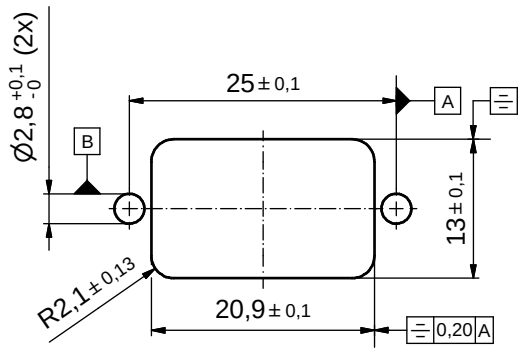

RECOMMENDED PANEL CUT-OUT

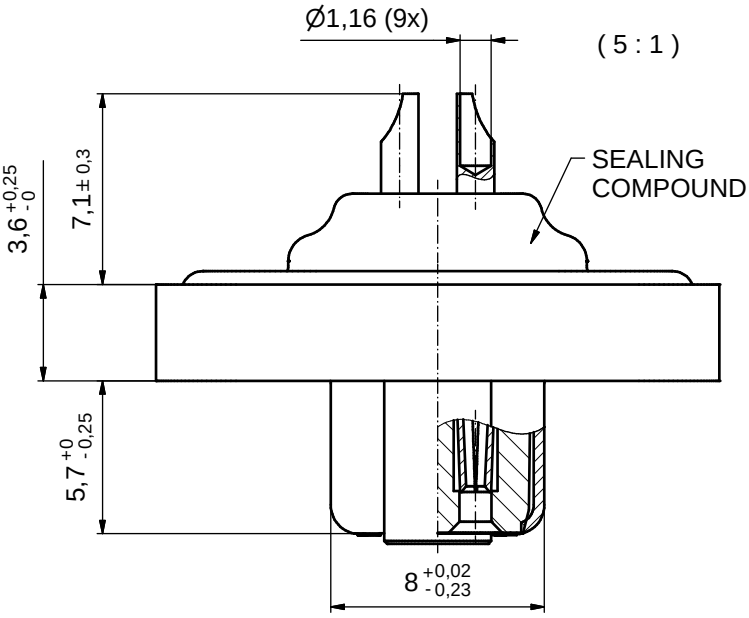

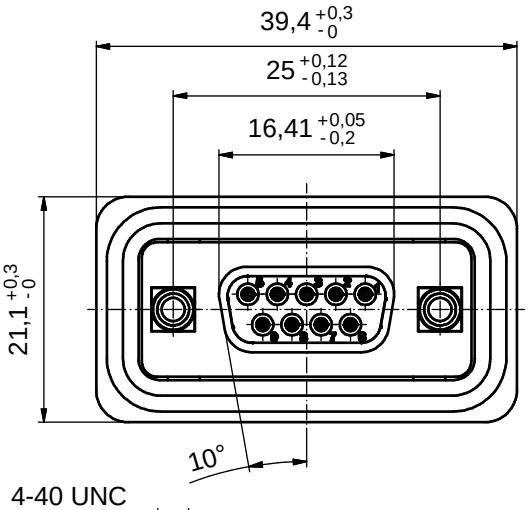

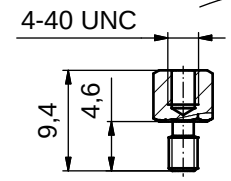

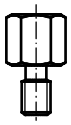

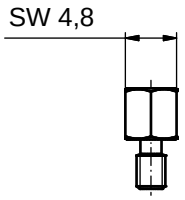

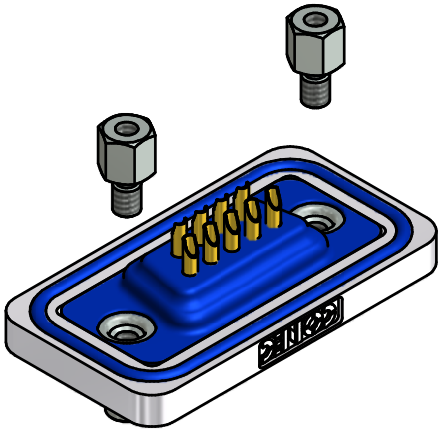

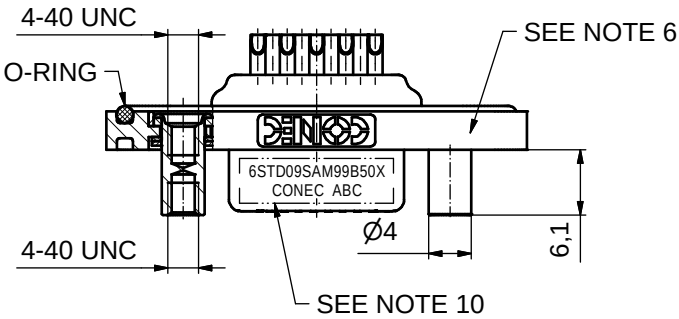

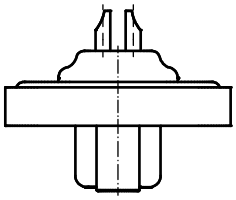

AT ALL TIMES WATER RESISTANT CONNECTORS NOT IN USE SHOULD BE COVERED WITH A CONEC WATER RESISTANT CAP OR WATER TIGHT HOOD.

NOTES:

1. METALSHELLS: COPPER ALLOY; min. 315µin TIN over 40-80µin NICKEL
2. INSULATORS: PBT GF UL 94 V-0; BLACK
3. CONTACTS: COPPER ALLOY
   PLATING: 8µin HARD GOLD over min. 50µin NICKEL
   SOLDER CUP ACCEPTS CABLE AWG 20
4. THREADED LOCKS: COPPER ALLOY; min. 200µin TIN over 80µin NICKEL
5. COLLARS: COPPER ALLOY; min. 200µin TIN over 80µin NICKEL
6. FRAME: ZINC DIE CAST; NICKEL PLATED
7. O-RING: SILICON; BLUE
8. HEXLOCKING SCREWS: STAINLESS STEEL
9. RECOMMENDED TORQUE FOR MOUNTING SCREW 35Ncm (3.1 in.LB) / max.40Ncm (3.5 in.LB)
10. CONNECTOR IS PART MARKED: 6STD09SAM99B50X CONEC ABC

Directive 2002/95/EC „RoHS" Compliant

APPROVAL # FREIGABE # DEBLOCAGE # AUTORIZACION # APPROVAL

CUSTOMER APPROVAL DATE:

NAME: TITLE:

COMPANY NAME:

APPROVAL # FREIGABE # DEBLOCAGE # AUTORIZACION # APPROVAL

THIS DRAWING MAY NOT BE COPIED OR REPRODUCED IN ANY WAY, AND MAY NOT BE PASSED ON TO A THIRD PARTY WITHOUT WRITTEN PERMISSION. OWNERSHIP AND COPYRIGHT OF CONEC GmbH

DO NOT ALTER CAD DRAWING BY HAND

rev.	description	date	name
a	Origin		

tolerance

dim. in mm

	date	name
drawn	27.08.2010	Henneboel
appd.	27.08.2010	Fischer
norm		
d-old		

scale: 2:1 (5:1)

material: SEE NOTES

title: D-SUB FEMALE
9pos. SOLDER CUP
with threaded lock and hexlocking screw

dwg no: 15K1A715

Inventor 10

DIN-A3

sh: 1

part no: 6STD09SAM99B50X