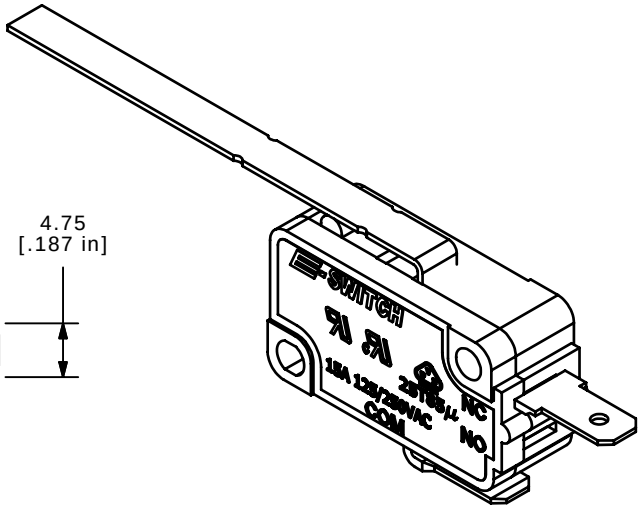


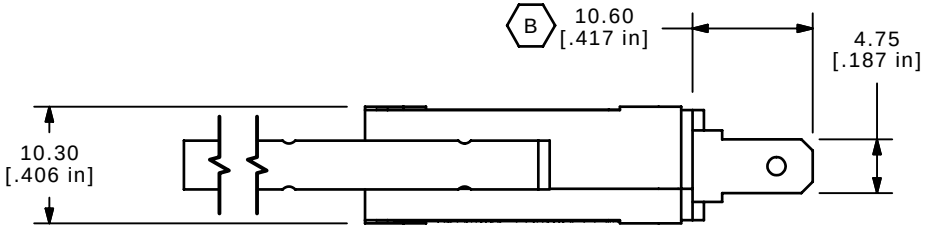


| ▲ O.P. (MM) | P.T. (MM) |
|---|---|
| 15.3 ± 2.0 | 8.5 MAX. |

O.P. = OPERATING POINT
P.T. = PRE-TRAVEL

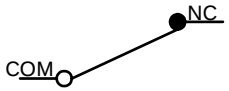


CIRCUIT: SPST
NORMALLY CLOSED

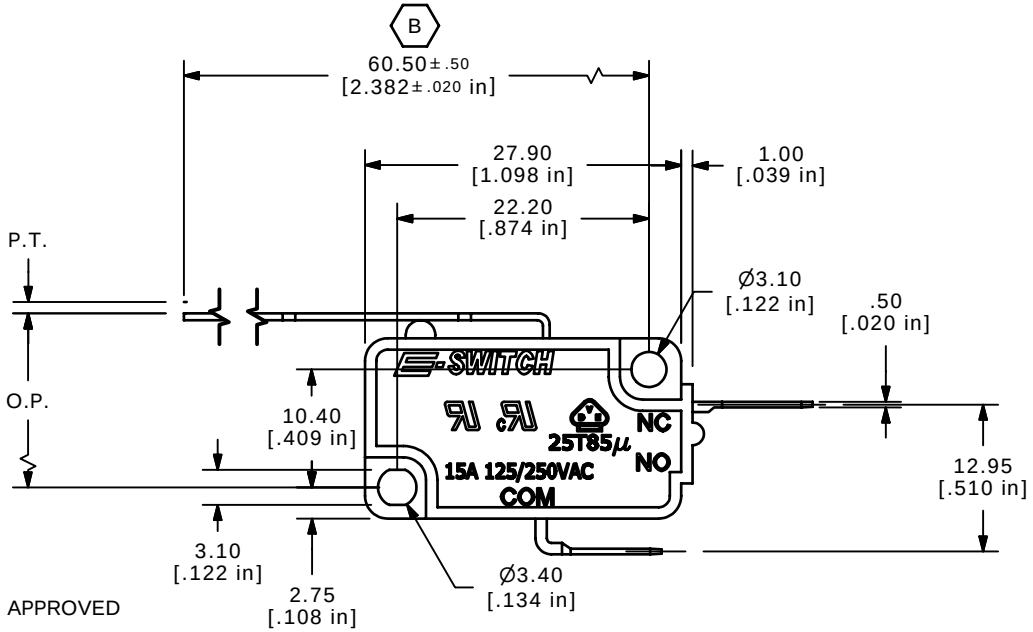


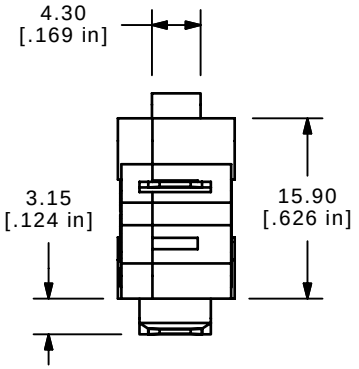


NOTES:
1. ALL DIMENSIONS IN MM [INCH]
2. GENERAL TOLERANCE: X.X=± 0.4
   X.XX=± 0.25
3. RATING: 15A @125/250VAC UL, CUL, VDE APPROVED
▲ 4. OPERATING FORCE: 25± 10 GRAMS
5. OPERATING TEMP: -25˚C TO 85˚C
6. ELECTRICAL LIFE: 50,000 CYCLES MIN.
7. MECHANICAL LIFE: 1,000,000 CYCLES TYP. B
8. INSULATION RESISTANCE: 100 MEGA-OHMS MIN.
9. DIELECTRIC STRENGTH: 1500VAC 1 MINUTE (INITAL VALUE)
10. CONTACT RESISTANCE: 100 MILLI -OHMS MAX.
11. ▲DENOTES CRITICAL PARAMETER.
12. 2002/95/EC (ROHS) COMPLIANT

| REV | PCR NO | DESCRIPTION | DATE | BY |
|---|---|---|---|---|
| C | 15632 | CHANGES NOTED | 12/21/05 | PH |
| B | 15554 | EDIT CIRCUIT, DIM FROM 3.20 TO 3.15 | 11/23/05 | PH |
| A | 15509 | RELEASED FOR PRODUCTION | 11/9/05 | PH |

*THE INFORMATION CONTAINED IN THIS DOCUMENT IS PROPRIETARY TO E-SWITCH AND IS NOT TO BE COPIED OR TRANSFERRED*

E-SWITCH®

TITLE LS0851503F025C1B

| SCALE | DATE | DR | DWG | REV |
|---|---|---|---|---|
| 1.5:1 | 11/9/2005 | PH | Q950022 | C |