P.C.B. LAYOUT

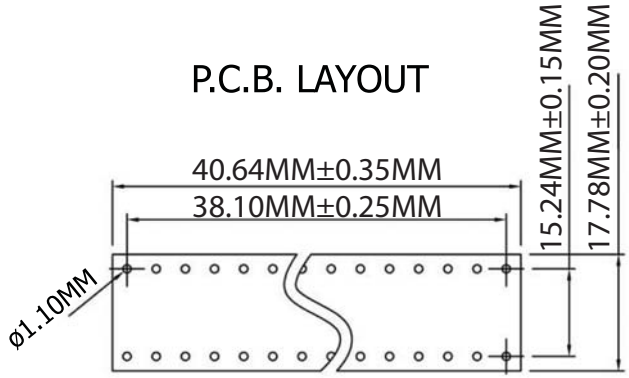

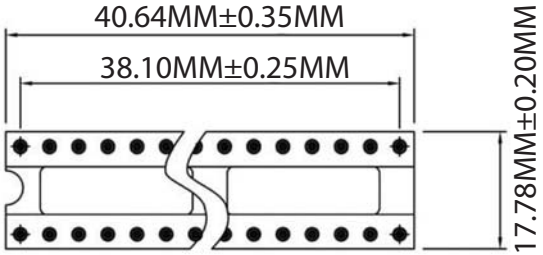

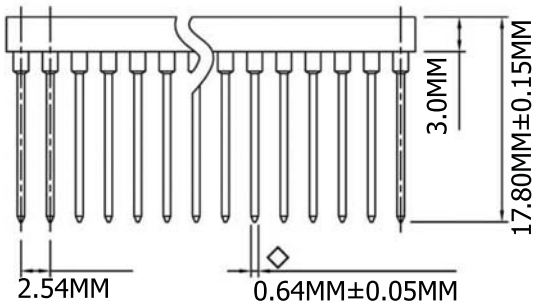

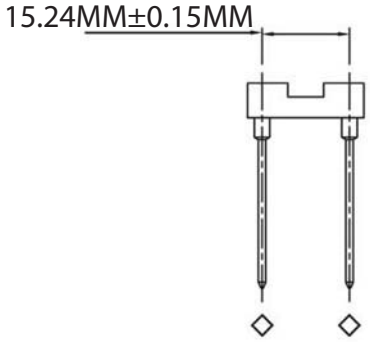

Materials

Pin (outer sleeve) :	Brass,machined, CuZn38Pb2
Clip (contact 4 finger) :	Beryllium copper, heat treated or PHBZ
Plating (outer sleeve) :	Tin plated : 2µm/80µ"nickel,5µm/200µ" Tin
Plating clip (contact):	2µm/80µ"nickel, Gold
Insulator body (black) :	Glass filled thermoplastic polyester UL94V-0

Electrical

Current rating :	3 Amps/contact max.
Contact resistance :	Max 4mΩ
Insulation resistance :	Min 10,000mΩ @ 500 V AC
Operating Voltage :	100 VRMS / 150 V AC

Mechanical

Operating temperature :	Tin plated: -40°C to +105°C
Average insertion force with steel pin of:	0.43mm/0.017" < 250g
Average withdrawal force with steel pin of:	0.43mm/0.017" >50g
Mechanical life :	min.200
Packaging:	Tube

RoHS Complaint

Scale	1:1							Name
TOLERANCE						Drawn	11.07.11	Chappell
X.X	±0.40					Approved		
X.XX	±0.25							
X.XXX	±0.15							
Angle	±3°							
			Modification	Date	Name			

ASSMANN WSW components

Item No. **AR32-HZW/T-R**

Title IDC-Socket, 32 Pin, Wire Wrap, Pitch: 2.54MM, Pin Length: 17.80.MM

Drawing No. **rev00**

Replace | Sheet