THIS DRAWING IS UNPUBLISHED. RELEASED FOR PUBLICATION 20
© COPYRIGHT 20 BY TYCO ELECTRONICS CORPORATION. ALL RIGHTS RESERVED.

LOC	DIST
CM	00

REVISIONS

P	LTR	DESCRIPTION	DATE	DWN	APVD
	K	REVISED PER 0G3B-0540-04	30JUL04	KW	DC
	K1	REVISED PER ECO-06-008661	19JUL06	KW	DC

1. MATERIAL: NYLON UL94V-2 (NATURAL).
2. MARKING FOR UL AND CSA LOGO SHALL BE LOCATED ON ANY EXTERNAL SURFACE.
3. AMP LOGO AND CIRCUIT NUMBERS LOCATED IN AREA, EITHER SIDE, SIZE OPTIONAL, FROST BACKGROUND.
4. WALL THICKNESS TO MEASURE 0.36-0.46 [.014-.018]

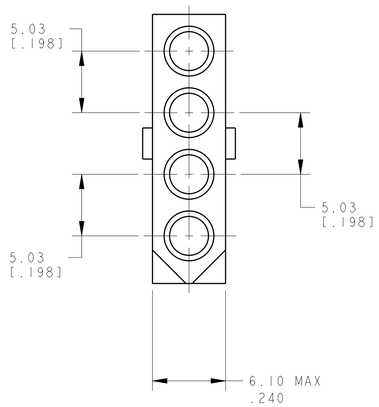

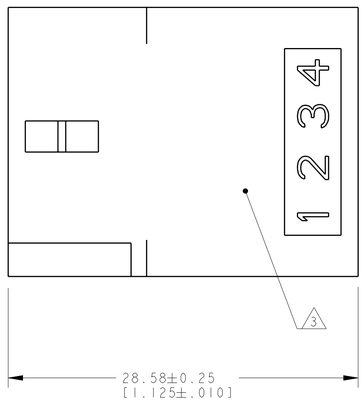

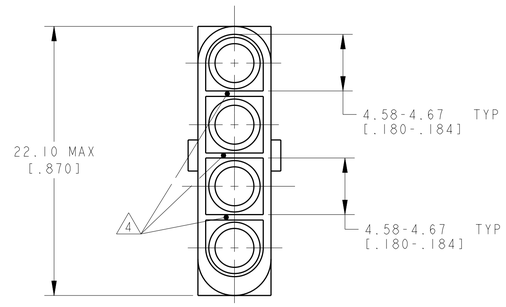

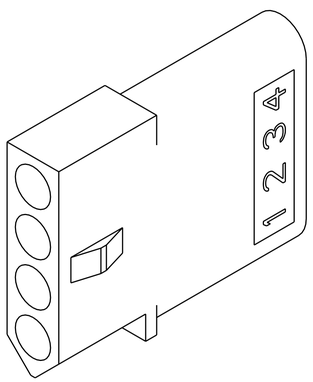

770075-1

PART NUMBER

THIS DRAWING IS A CONTROLLED DOCUMENT FOR TYCO ELECTRONICS CORPORATION. IT IS SUBJECT TO CHANGE AND THE CONTROLLING ENGINEERING ORGANIZATION SHOULD BE CONTACTED FOR THE LATEST REVISION.

DIMENSIONS: mm [INCHES]

TOLERANCES UNLESS OTHERWISE SPECIFIED:
0 PLC ±-
1 PLC ±-
2 PLC ±0.13 [.005]
3 PLC ±-
4 PLC ±-
ANGLES ±0°30'

MATERIAL - 1
FINISH - -

METRIC

DWN	K. WHITAKER	02AUG2004
CHK	D. COLEY	02AUG2004
APVD	D. COLEY	02AUG2004
PRODUCT SPEC	-	
APPLICATION SPEC	-	
WEIGHT	-	

tyco Electronics
Tyco Electronics
Harrisburg, PA 17105-3608

NAME
RECEPTACLE,
4 CIRCUIT,
.093 COMMERCIAL PIN AND SOCKET

SIZE	CAGE CODE	DRAWING NO	RESTRICTED TO
A1	00779	C-770075	-

CUSTOMER DRAWING

SCALE	SHEET	OF	REV
4:1	1	1	K1