	COUNT	DESCRIPTION OF REVISIONS	BY	CHKD	DATE		COUNT	DESCRIPTION OF REVISIONS	BY	CHKD	DATE
△					. .	△					. .
△					. .	△					. .
△					. .	△					. .

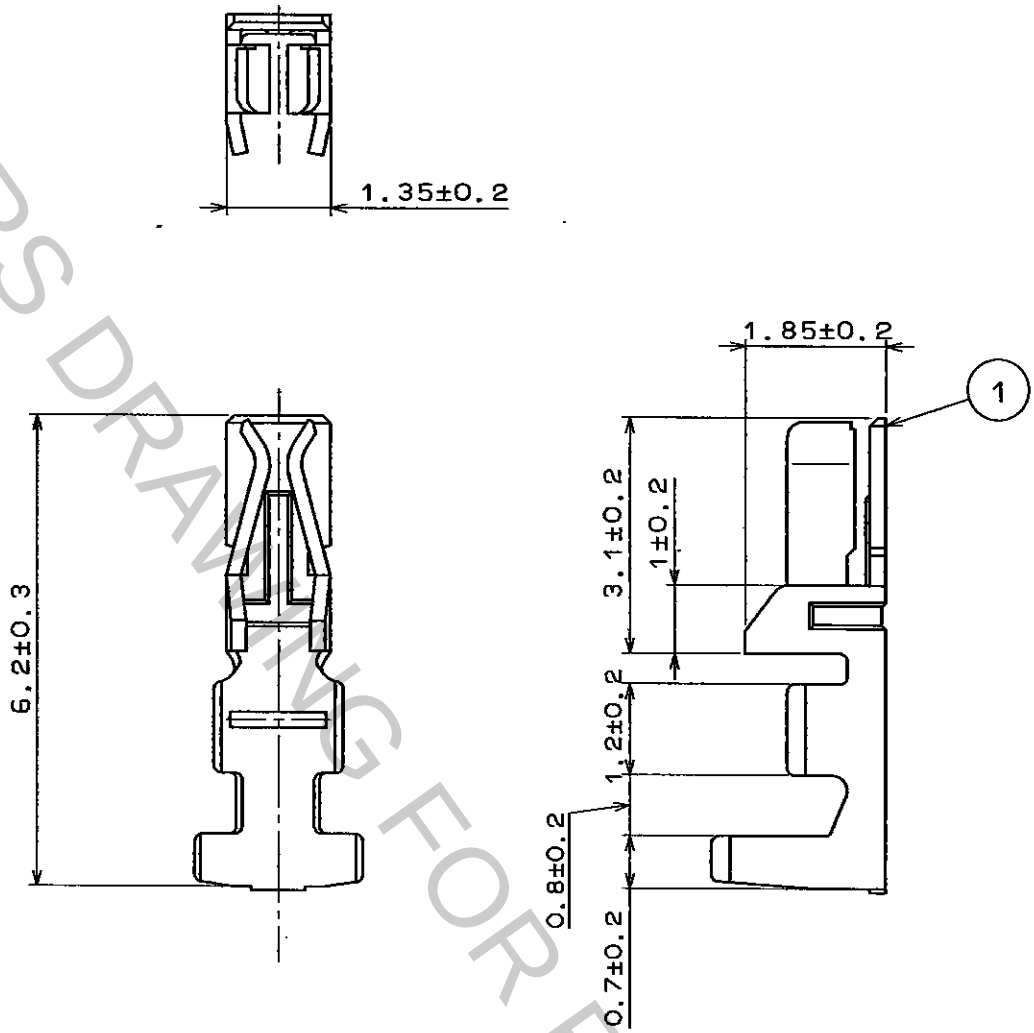

NOTE1. 100 CONNECTORS ARE IN ONE PACK.

NO.	MATERIAL	FINISH , REMARKS	NO.	MATERIAL	FINISH , REMARKS
			1	PHOSPHOR BRONZE	TIN PLATED

CODE NO. (OLD)	DRAWN	DESIGNED	CHECKED	APPROVED	RELEASED
	J.Miyayoshi '96.1.22	J.Miyayoshi '96.1.22	J.Osa '96.1.22	H.Yamada '96.1.24	

SCALE 10 : 1	DRAWING NO. EDC4-020865	PART NO. DF11-2428SC
UNITS mm	HRS HIROSE ELECTRIC CO., LTD.	CODE NO. CL543-0501-5 1/1

TO

FORM No. 228

HRS DRAWING FOR REFERENCE

Apr.1.2017 Copyright 2017 HIROSE ELECTRIC CO., LTD. All Rights Reserved.