PART NAME	NEMA 4X ENCLOSURE	PART No.	PN-1330, PN-1330-C AND PN-1330-DG	REV. DATE	11-17-08

INDUSTRY STANDARDS:

POLYCARBONATE (LIGHT GRAY AND CLEAR)
- UL94-HB FLAMMABILITY RATING (UL FILE #E41613)
- UV STABILIZED
- SERVICE TEMPERATURE RANGE: -40°C TO +120°C

ABS (DARK GRAY)
- UL94-HB FLAMMABILITY RATING (UL FILE #E56070)
- SERVICE TEMPERATURE RANGE: -40°C TO +80°C

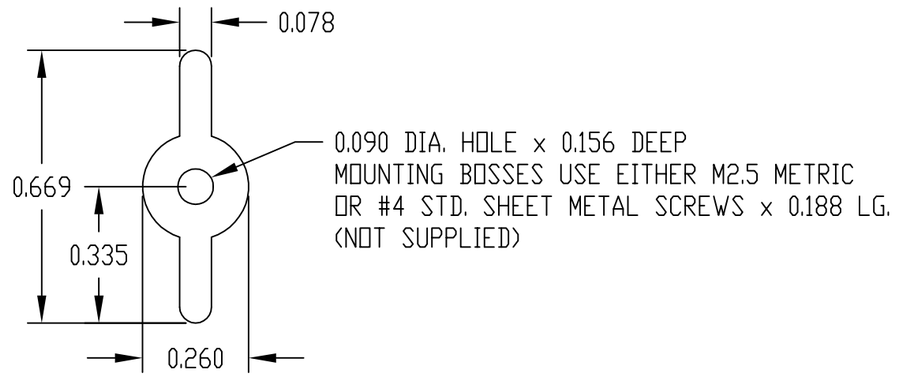

DETAIL "C"
(2 PLACES)

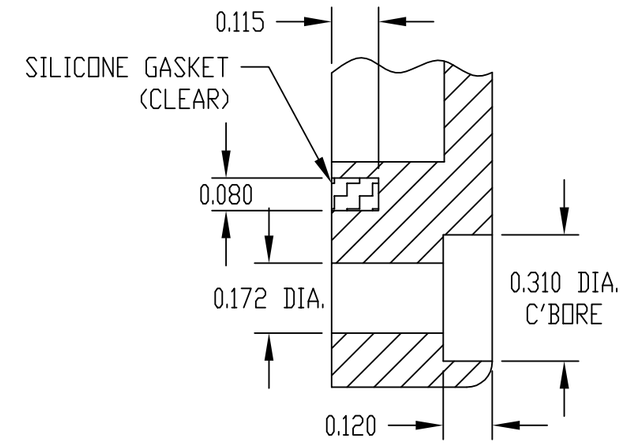

DETAIL "D"

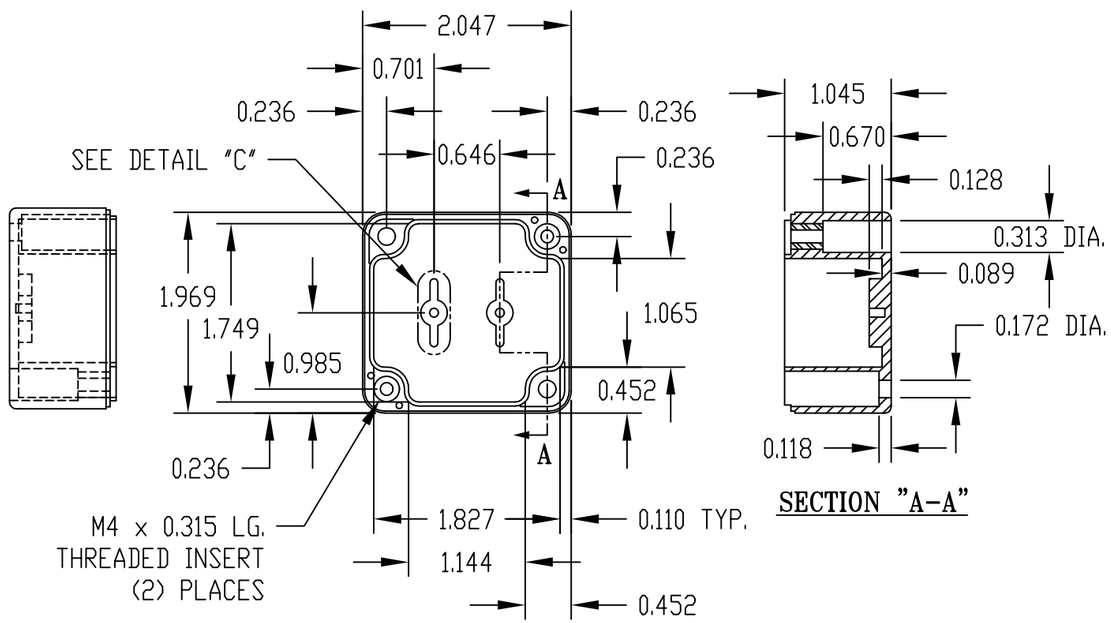

SECTION "A-A"

BODY

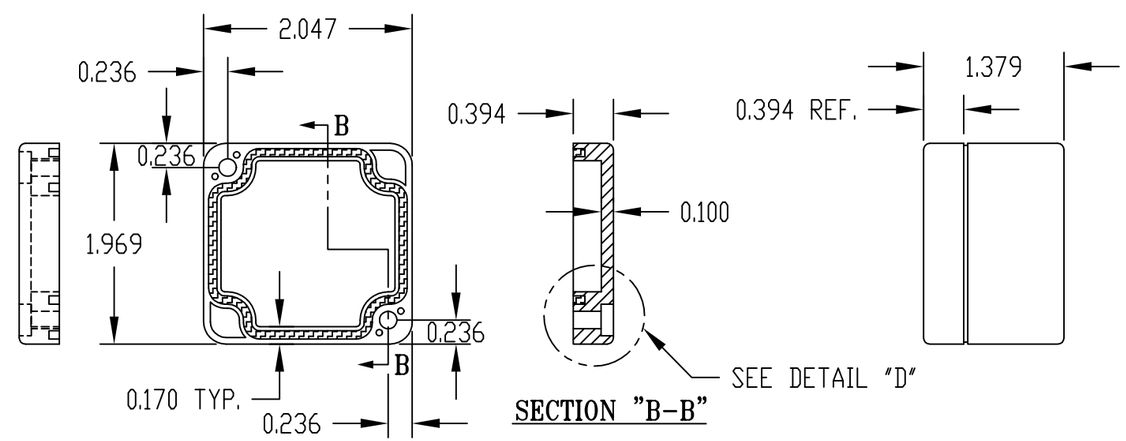

SECTION "B-B"

COVER

NOTE: ALL DIMENSIONS HAVE ±0.015 TOLERANCE UNLESS OTHERWISE SPECIFIED.

PART NUMBER	MATERIAL		FINISH		HARDWARE KIT
	BODY	COVER	BODY	COVER	
PN-1330	POLYCARBONATE		LIGHT GRAY		KIT CONTAINS (2) M4 x 20mm (0.787") LG. SCREWS FOR ASSEMBLY
PN-1330-C	POLYCARBONATE		LIGHT GRAY	CLEAR	
PN-1330-DG	HIGH-IMPACT ABS		DARK GRAY		