| PART NUMBER | ITEM ① BODY | ITEM ② CONTACT | ITEM ③ INTERFACE | ITEM ④ INSULATOR | ITEM ⑤ CRIMP SLEEVE |
|---|---|---|---|---|---|
| 133-8445-001 | BRASS<br>GOLD PL .00001 MIN OVER<br>NICKEL PL .00005 MIN OVER<br>COPPER PL .00005 MIN | BERYLLIUM COPPER<br>GOLD PL .00003 MIN OVER<br>NICKEL PL .00005 MIN OVER<br>COPPER PL .00005 MIN | BERYLLIUM COPPER<br>GOLD PL .00003 MIN OVER<br>NICKEL PL .00005 MIN OVER<br>COPPER PL .00005 MIN | TEFLON | COPPER<br>GOLD PL .00001 MIN OVER<br>NICKEL PL .00005 MIN OVER<br>COPPER PL .00005 MIN |

| DRAWING NO. | | | | | |
|---|---|---|---|---|---|
| C - 133-8445-001/010 | | | | | |
| 0 | REVISIONS | | | | |
| ENGINEERING RELEASE | | | | | |
| 1 | 1-8-01 | RH | KAS | JRB | ECN 47461 |

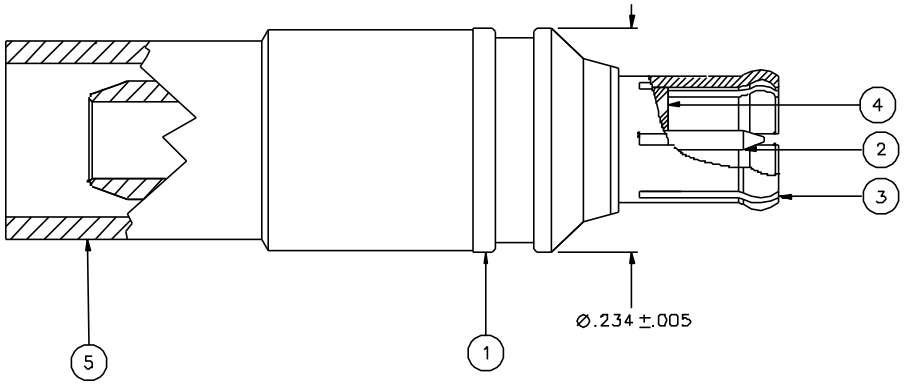


NOTES:

1. SPECIFICATIONS:

IMPEDANCE: 75 OHMS
FREQUENCY RANGE: 0-6 GHz
VSWR: 1.13+.04F MAX (F IN GHz)
WORKING VOLTAGE: 335 VRMS MAX AT SEA LEVEL
DIELECTRIC WITHSTANDING VOLTAGE: 1000 VRMS MIN AT SEA LEVEL
INSULATION RESISTANCE: 1000 MEGOHM MIN
CONTACT RESISTANCE:
CENTER CONTACT - INITIAL 5 MILLIOHM MAX, AFTER ENVIRONMENTAL 8 MILLIOHM MAX
OUTER CONDUCTOR - INITIAL 1 MILLIOHM MAX, AFTER ENVIRONMENTAL 1.5 MILLIOHM MAX
BODY TO CABLE - INITIAL 1 MILLIOHM MAX, AFTER ENVIRONMENTAL NOT APPLICABLE
CORONA LEVEL: 250 VOLTS MINIMUM AT 70,000 FEET
INSERTION LOSS: .1 DB MAX AT 1 GHz
RF LEAKAGE: -55 DB AT 2.5 GHz
RF HIGH POTENTIAL WITHSTANDING VOLTAGE: 700 VRMS AT 4 AND 7 MHz

MECHANICAL:

ENGAGE/DISENGAGE FORCE: 5.6 LBS MAX ENGAGEMENT
3.0 LBS TYPICAL DISENGAGEMENT, 1.0 LB MIN
CONTACT RETENTION FORCE: 2.3 LBS MIN AXIAL FORCE
CONTACT RETENTION TORQUE: NOT APPLICABLE
COUPLING MECHANISM RETENTION: NOT APPLICABLE
CABLE ACCEPTABILITY: BELDEN 735A, BT3002, TZC75024
CABLE HEX CRIMP SIZE: .178
CABLE RETENTION: 20 LBS MIN AXIAL FORCE
DURABILITY: 500 CYCLES MIN

ENVIRONMENTAL:

(MEETS OR EXCEEDS THE APPLICABLE PARAGRAPH OF MIL-C-39012)
THERMAL SHOCK: MIL-STD-202, METHOD 107, CONDITION B
OPERATING TEMPERATURE: -65 DEG C TO 165 DEG C
CORROSION: MIL-STD-202, METHOD 101, CONDITION B
SHOCK: MIL-STD-202, METHOD 102, CONDITION B
VIBRATION: MIL-STD-202, METHOD 204, CONDITION B

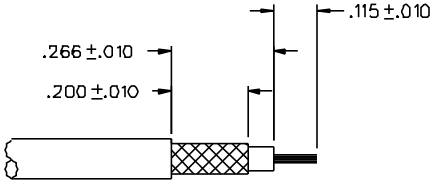


CABLE STRIP DIMENSIONS

4:1

CUSTOMER DRAWING

THIS DRAWING TO BE INTERPRETED PER ANSI Y 14.5M - 1982

"μSTATION"

COMPANY CONFIDENTIAL

| TOLERANCE UNLESS OTHERWISE SPECIFIED | | DRAWN BY KAS | DATE 5-3-00 | JOHNSON® a cinch connectivity solutions brand | Cinch Connectivity Solutions 299 Johnson Ave. Ste. 100 Waseca, MN 56093 1-800-247-8256 |
|---|---|---|---|---|---|
| DECIMALS .XX | mm | CHECKED BY KAS | DATE 1-9-01 | TITLE | PLUG ASSEMBLY STRAIGHT, BELDEN 735A MCX 75 OHM |
| .XXX+-.003 | | APPROVED BY TAK | DATE 1-18-01 | | |
| MATL | | APPROVED BY RJB | DATE 1-18-01 | CODE NO. | DRAWING NO. C - 133-8445-001/010 |
| FINISH | | RELEASE DATE | | SCALE 10:1 | U/M INCH SHEET 2 OF 2 |