THIS DRAWING IS UNPUBLISHED. RELEASED FOR PUBLICATION 2006
© COPYRIGHT 2006 BY TYCO ELECTRONICS CORPORATION. ALL RIGHTS RESERVED.

LOC	DIST
A1	-

REVISIONS

P	LTR	DESCRIPTION	DATE	DWN	APVD
	A3	ECR-09-013545	12MAY2009	SR	AR

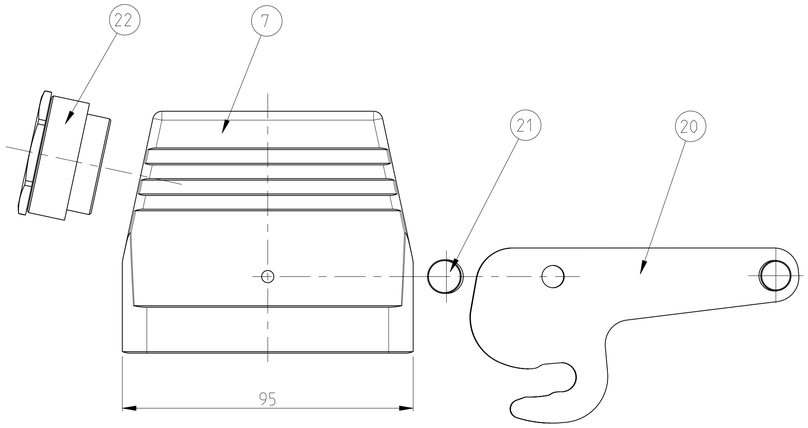

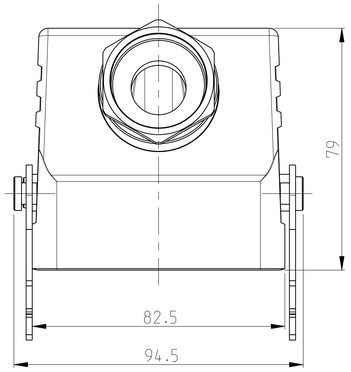

NOTES

1 PART SHALL BE FREE AND CLEAN OF BURRS AND OTHER FOREIGN MATERIAL

2 PACKAGING: QUANTITY 3 PIECES

3 VARNISHING INSIDE HOUSING NOT REQUIRED

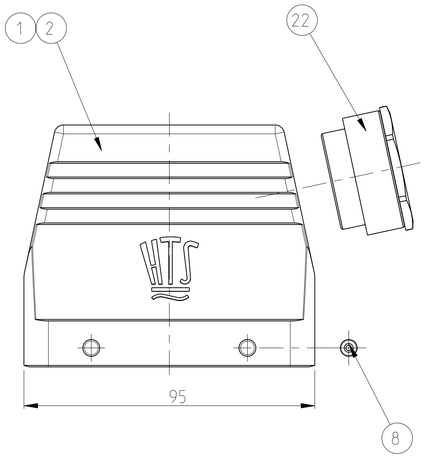

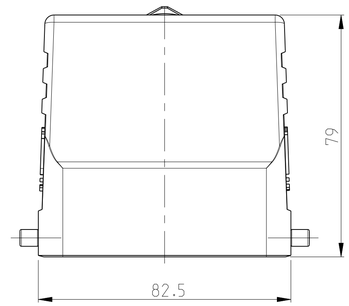

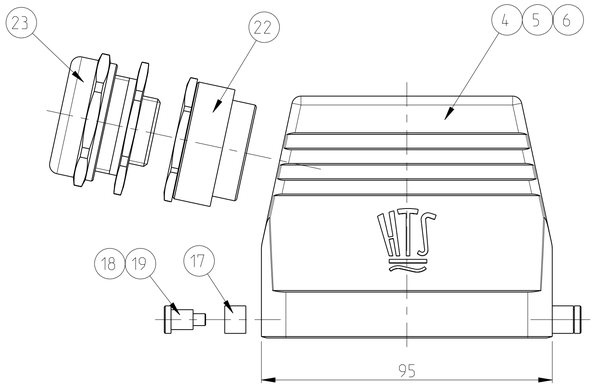

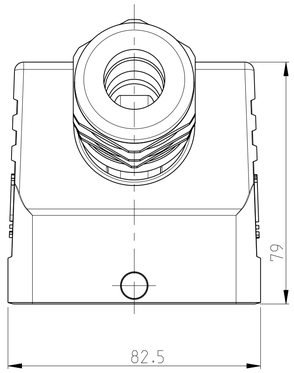

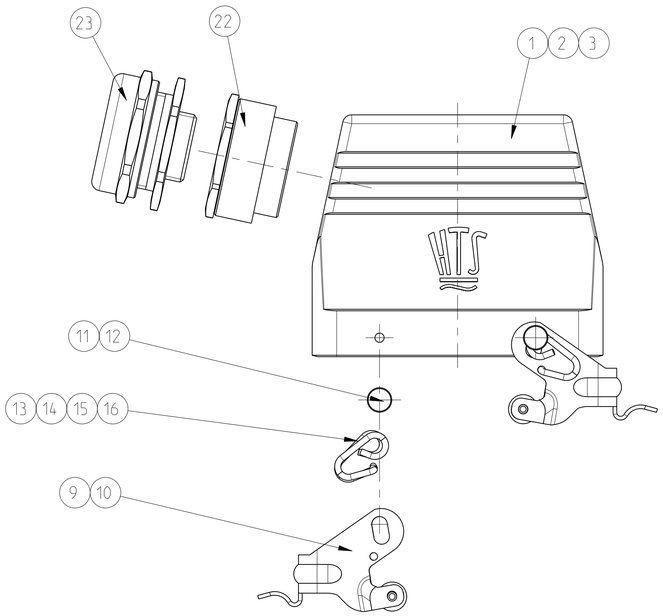

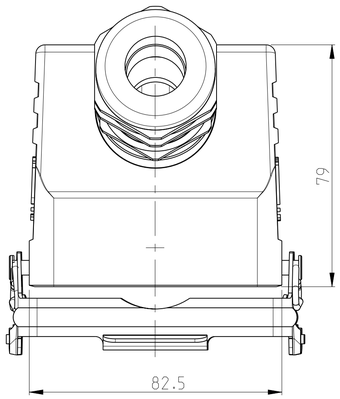

	1			1					GLAND FITTING	BRASS	NICKEL PLATED	BLUE	23	Pg29
1		1	1		1	1	1	1	CABLE FITTING	BRASS	NICKEL PLATED	BLUE	22	PG29
2									CLIP POSITIONER	STEEL	ZINC PLATED	BLUE	21	
1									CENTRAL CLIP	STEEL	ZINC PLATED	BLUE	20	
	2								CLIP BOLT	STAINLESS STEEL	BLANC		19	
		2	2						SLIDE SPOOL	STEEL	ZINC PLATED	BLUE	18	
		2	2						CLIP BOLT	STEEL	ZINC PLATED	BLUE	17	
				2					CLIP SPRING RIGHT	STAINLESS STEEL	BLANC		16	
					2	2			CLIP SPRING RIGHT	STEEL	ZINC PLATED	BLUE	15	
				2					CLIP SPRING LEFT	STAINLESS STEEL	BLANC		14	
					2	2			CLIP SPRING LEFT	STEEL	ZINC PLATED	BLUE	13	
				4					CLIP POSITIONER	STAINLESS STEEL	BLANC		12	
					4	4			CLIP POSITIONER	STEEL	ZINC PLATED	BLUE	11	
				2					LOCKING CLIP	STAINLESS STEEL	BLANC		10	
					2	2			LOCKING CLIP	STEEL	ZINC PLATED	BLUE	9	
							4	4	CLIP BOLT	STEEL	ZINC PLATED	BLUE	8	
1									HOOD	ALUMINIUM		BLACK	7	
	1								HOOD	ALUMINIUM	ALUMINIUM OXID	BLACK	6	
		1							HOOD	ALUMINIUM		GREY	5	NEUTRAL
			1						HOOD	ALUMINIUM		GREY	4	
				1					HOOD	ALUMINIUM	ALUMINIUM OXID	BLACK	3	
					1		1		HOOD	ALUMINIUM		GREY	2	NEUTRAL
						1		1	HOOD	ALUMINIUM		GREY	1	
1-3	2-7	0-1	1-7	2-1	0-3	1-1	0-2	1-6	DESCRIPTION	MATERIAL	SURFACE	COLORE	ITEM	NOTES
								HB.32.STS.1.29						
							HB.32.STS.1.29							
						HB.32.STS-VS.1.29								
					HB.32.STS-VS.1.29									
				HB-K.32.STS-VS.1.29										
			HB.32.STS-GR.1.29											
		HB.32.STS-GR.1.29												
	HB-K.32.STS-GR.1.29													
HB-Z.32.STS-ZB.1.29														

THIS DRAWING IS A CONTROLLED DOCUMENT FOR TYCO ELECTRONICS CORPORATION. IT IS SUBJECT TO CHANGE WITHOUT NOTICE. THE ORIGINATING ORGANIZATION SHOULD BE CONTACTED FOR THE LATEST REVISION.

DIMENSIONS: mm

TOLERANCES UNLESS OTHERWISE SPECIFIED:
0 PLC ±-
1 PLC ±-
2 PLC ±-
3 PLC ±-
4 PLC ±-
ANGLES ±°

MATERIAL - - -

FINISH - - -

DWN R.SCHNEIDER 12MAY2009
CHK T.SCHNURPFEIL 12MAY2009
APVD -
PRODUCT SPEC -
APPLICATION SPEC -
WEIGHT -

Tyco Electronics
Tyco Electronics AMP GmbH
53757 Sankt Augustin (Germany)

NAME
HOOD
HB.32.STS.1.29.G
-

SIZE	CAGE CODE	DRAWING NO	RESTRICTED TO
A1	00779	C-1102346	-

CUSTOMER DRAWING | SCALE 1:1 | SHEET 1 OF 1 | REV A3

AMP 4805 REV 31MAR2000

Pro/ENGINEER DRAWING