THIS COPY IS PROVIDED ON A RESTRICTED BASIS AND IS NOT TO BE USED IN ANY WAY DETRIMENTAL TO THE INTERESTS OF PANDUIT CORP.

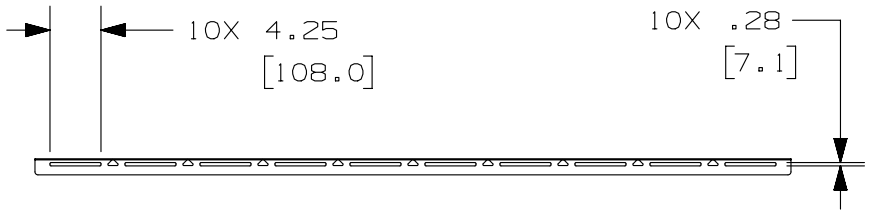

PANDUIT PART NUMBER	WEIGHT
WGDW4**	6.55 LBS (2971.0 g)

NOTES:
1. PANDUIT PART NUMBER WGDW4** INCLUDES:
   A. TWO [2] 4" X 63" LONG WYR-GRID NOTCHED DIVIDER WALL
   B. SIX [6] WYR-GRID TRUSS BOLT ASSEMBLIES
   C. SIX [6] 1/4-20 X 3/4" LONG PHILLIPS TRUSS HEAD SCREWS
2. DIMENSIONS IN PARENTHESES ARE METRIC.
3. SEE CATALOG FOR ADDITIONAL PART SUFFIXES TO INDICATE PART FINISH AND/OR PACKAGE QUANTITY.

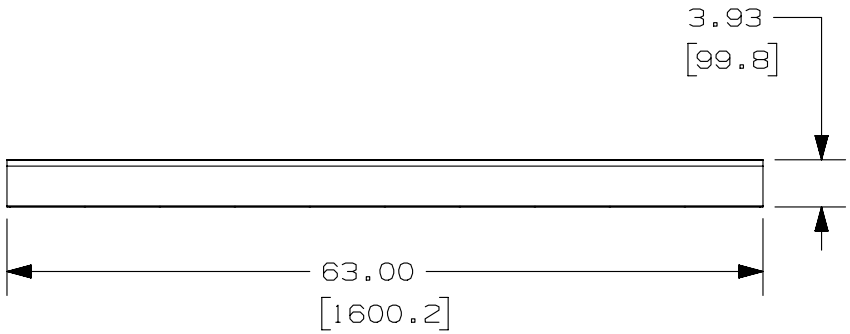

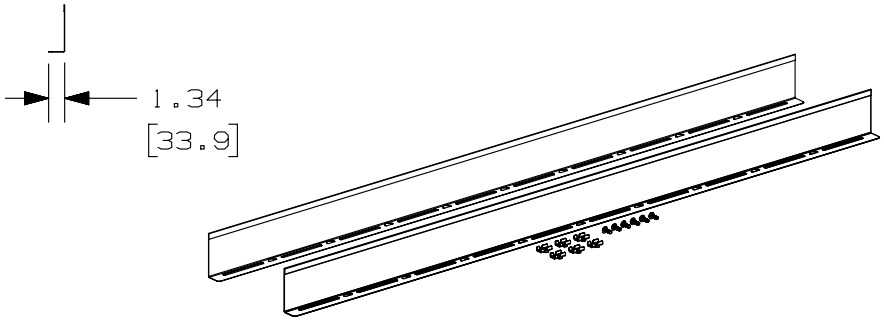

REV	DATE	BY	CHK	APR	DESCRIPTION	ECN
R	08-27-13	SSP	DWR	RN	RELEASED TO PRODUCTION	11D238CU-DC

TITLE

4" X 63" LONG WYR-GRID NOTCHED DIVIDER WALL (WGDW4**)

CUSTOMER DRAWING

ITEM REVISION NAME: 11D238CU/00

DATASET FILE NAME: 11D238CU_DC/00A WGDW4**

UNLESS OTHERWISE SPECIFIED, DIMENSIONAL TOLERANCES ARE: IN [mm]

.X ± .XXX ±

.XX ± .5 [1.3] ANGLES ± 5 °

THIRD ANGLE PROJECTION

MATERIAL: STEEL

DRAWING NUMBER: 11D238CU-DC

DRAWN BY	DATE	CHK	SCALE	SHT 1 OF 1	SIZE
SSP	08-27-13	DWR	NONE		A