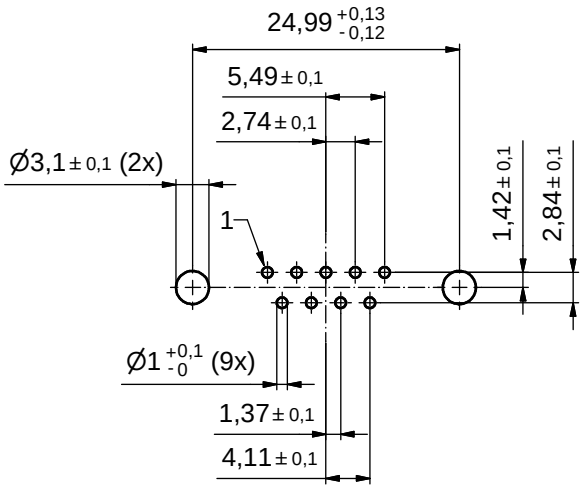

P.C.B. HOLE DRILLINGS
(P.C.B. TOP SIDE)

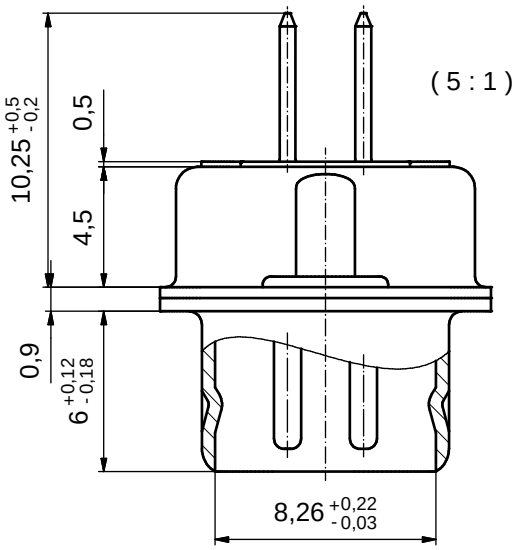

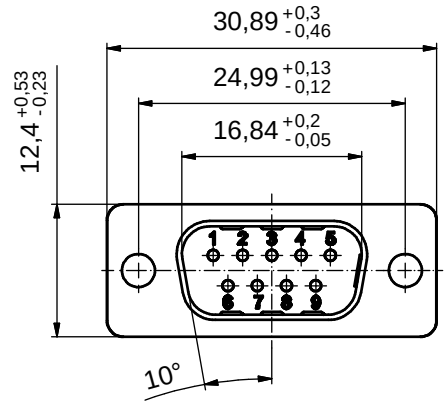

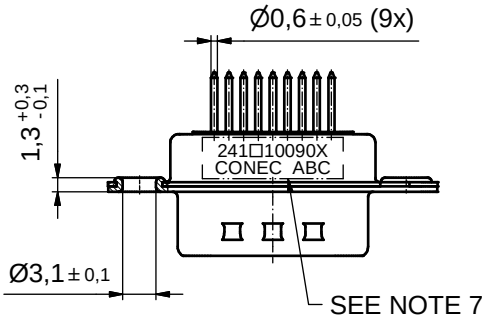

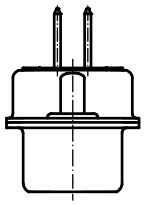

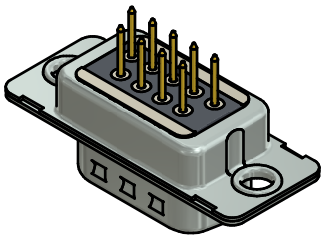

NOTES:

1. FOR WAVESOLDERING (SOLDER BATH TEMPERATURE 260°C FOR 5 SEC. AND SOLDER PREHEAT 100°C FOR 30SEC.)
2. METALSHELLS: STEEL; min. 315µin TIN over 40-80µin NICKEL
3. INSULATOR: HIGH TEMPERATURE PLASTIC UL 94 V-0; BLACK
4. CONTACTS: COPPER ALLOY; PLATING (SEE PART NO.):
   - ☐ PLEASE ADD A for GOLD FLASH over min. 50µin NICKEL (PREFERRED TYPE)
   - ☐ PLEASE ADD B for 20µin HARD GOLD over min. 50µin NICKEL
   - ☐ PLEASE ADD C for 30µin HARD GOLD over min. 50µin NICKEL
   - CONTACTS TAILS PRETINNED
5. CAPACITANCE: 830pF ± 20%
6. DIELECTRIC WITHSTANDING VOLTAGE: 424 VDC
7. CONNECTOR IS PART MARKED: 241□10090X CONEC ABC (see note 4)

RoHS compliant

THIS DRAWING MAY NOT BE COPIED OR REPRODUCED IN ANY WAY, AND MAY NOT BE PASSED ON TO A THIRD PARTY WITHOUT WRITTEN PERMISSION. OWNERSHIP AND COPYRIGHT OF CONEC GmbH

DO NOT ALTER CAD DRAWING BY HAND

rev.	description	date	name
a	Original		

tolerance — dim. in mm

	date	name
drawn	23.09.2015	Heinrich
appd.	23.09.2015	Lehmenkühler
norm		
d-old		

CONEC®

scale: 2:1 (5:1)
material: SEE NOTES

title:
D-SUB C-FILTER MALE
9pos. SOLDER PIN STRAIGHT

dwg no: 24K1A1634
DIN-A3
sh: 1

part no: 241□10090X (see note 4)