NOTES:

1. MATERIALS AND FINISHES
   - BODY - BRASS, NICKEL PLATING
   - CONTACT - BERYLLIUM COPPER, GOLD PLATING
   - BULLET CONTACT - BRASS, GOLD PLATING
   - INSULATOR - PTFE
   - HEX NUT - BRASS, NICKEL PLATING
   - LOCK WASHER - BRASS, NICKEL PLATING
   - GASKET - SILICONE RUBBER
   - FERRULE - SEAMLESS COPPER TUBE, NICKEL PLATING
   - HEAT SHRINK TUBING - CROSSLINKED POLYOLEFIN
2. ELECTRICAL:
   - A. IMPEDANCE: 50 OHM
   - B. FREQUENCY RANGE: DC - 6 GHz
   - C. DIELECTRIC WITHSTANDING VOLTAGE: 1000 VRMS, MIN.
3. MECHANICAL:
   - A. DURABILITY: 500 CYCLES MIN.
   - B. TEMPERATURE RANGE: -40° C TO +85° C
4. PACKAGING:
   - A. QUANTITY: SINGLE PACK
   - B. MARKING: BAG TO BE MARKED "AMPHENOL RF, 31-6508, AND DATE CODE"
5. RECOMMENDED CABLE ASSEMBLY INSTRUCTIONS:
   - A. TRIM CABLE AS SHOWN.
   - B. SLIDE HEAT SHRINK TUBING, FERRULE AND INSULATOR DISC ONTO CABLE.
   - C. SOLDER CABLE CENTER CONDUCTOR TO BULLET CONTACT.
   - D. INSERT CABLE WITH FOIL ENTERING CONNECTOR AND BRAID OVER KNURL.
   - E. CRIMP FERRULE OVER BRAID WITH 0.213" HEX DIE.
   - F. APPLY HEAT SHRINK TUBING OVER FERRULE.
   - G. HEAT SHRINK TUBING SHOULD FULLY (360 DEG) COVER THE BUMP ON BODY AND END WITHIN AREA "A"
6. RECOMMENDED TORQUE APPLIED ON HEX NUT: 7-10 IN LBS
7. SHOWS CABLE ENTRY DIMENSIONS.

THIRD ANGLE PROJ.

REVISIONS

REV	DESCRIPTION	DATE	ECO	APPR
A	RELEASE TO MFG.	25-Mar-13	48952	TD
B	ADD ARC LOGO TO BODY AND AMPHENOL RF TO HST \RD-DMI3082201J8	30-Aug-13	49619	RLB

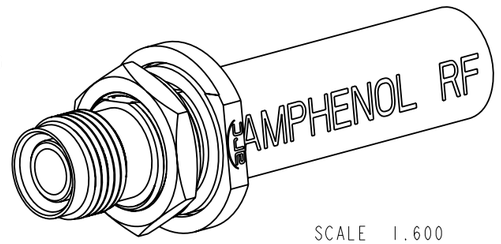

SCALE 1.600

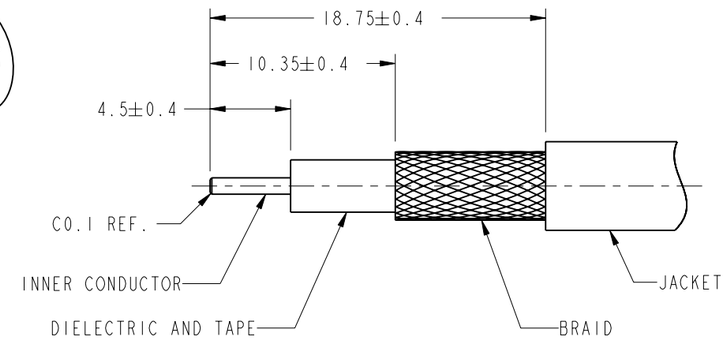

RECOMMENDED
CABLE STRIPPING DIMENSIONS

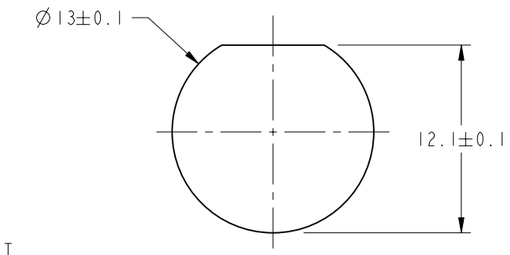

RECOMMENDED
MOUNTING HOLE DIMENSIONS

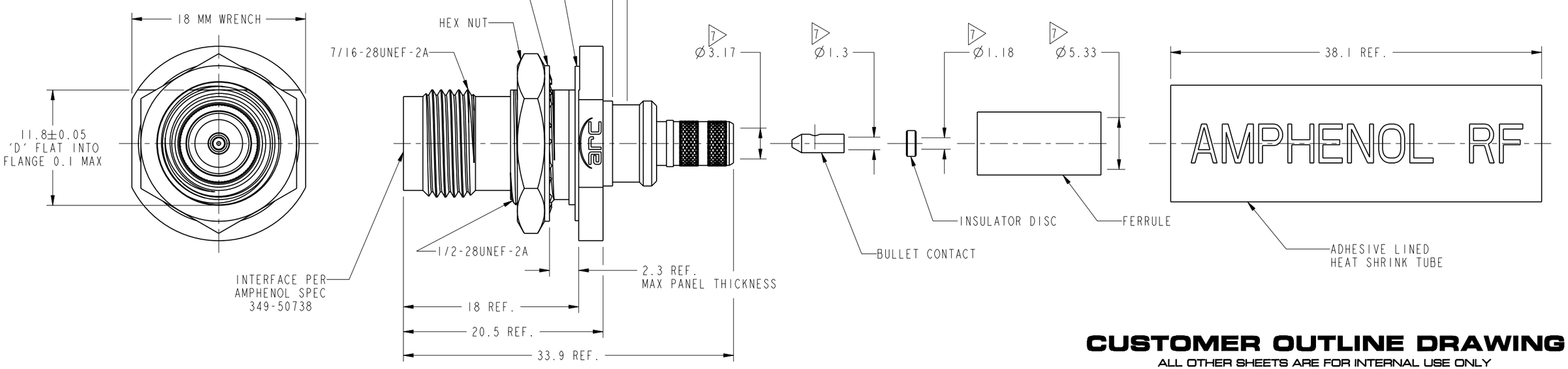

CUSTOMER OUTLINE DRAWING

ALL OTHER SHEETS ARE FOR INTERNAL USE ONLY

UNLESS OTHERWISE SPECIFIED, DIMENSIONS ARE IN METRIC AND TOLERANCES ARE:

<0.5mm	0.5 - 6mm	6 - 30mm	30 - 120mm	ANGLES
± 0.05mm	±0.1mm	±0.2mm	± 0.3mm	±1°

NOTICE - These drawings, specifications, or other data (1) are, and remain the property of Amphenol corp. (2) must be returned upon request; and (3) are confidential and not to be disclosed to any person other than those to whom they are given by Amphenol Corp. the furnishing of these drawings, specifications, or other data by Amphenol Corp., or to any other person to anyone for any purpose is not to be regarded by implication or otherwise in any manner licensing, granting rights to permitting such holder or any other person to manufacture, use or sell any product, process or design, patented or otherwise, that may in any way be related to or disclosed by said drawings, specifications, or other data.

MATERIAL: SEE NOTES	DRAWN: J.CHEN	DATE: 30-Aug-13	TITLE: TNC STR BHD JACK RP IP-67 FOR LMR-200 CABLE
	ENGINEER: D.DAVE	DATE: 08-Sept-11	
REFERENCE	APPROVED: S.HSIEH	DATE: 04-Sep-13	SCALE: 2.5:1.0 / SHEET 2 OF 2
CONFIGURATION LEVEL:	CAD FILE		DWG SIZE: B / REV: B
FINISH			

Amphenol RF
www.amphenolrf.com

DRAWING NO. 31-6508
ITEM NO. 31-6508
PART NO. 31-6508