REVISIONS			
LTR	DESCRIPTION	DATE	APPROVED

NOTES: UNLESS OTHERWISE SPECIFIED

1. CONSTRUCTION:
   HOUSING & PLUNGER: MOLDED NYLON TYPE 6,6. AVAILABLE IN TEN COLORS.
   CONTACT BLADE: BERYLLIUM COPPER PER QQ-C-533. GOLD PLATED PER MIL-G-45204 B TYPE 1 0.00001" [0.000254] THICK MINIMUM.
   SPRING: STAINLESS STEEL TYPE 302.

2. PERFORMANCE:
   MAXIMUM CURRENT: 5.9 AMPS WITH A 77° TEMPERATURE RISE.
   MAXIMUM VOLTAGE: 5.4 KV
   MAXIMUM TEMPERATURE: 200°F (93°C)

3. FEATURES:
   HOOK FITS COMPONENTS UP TO 0.040" [1.01].
   FIELD SERVICEABLE.

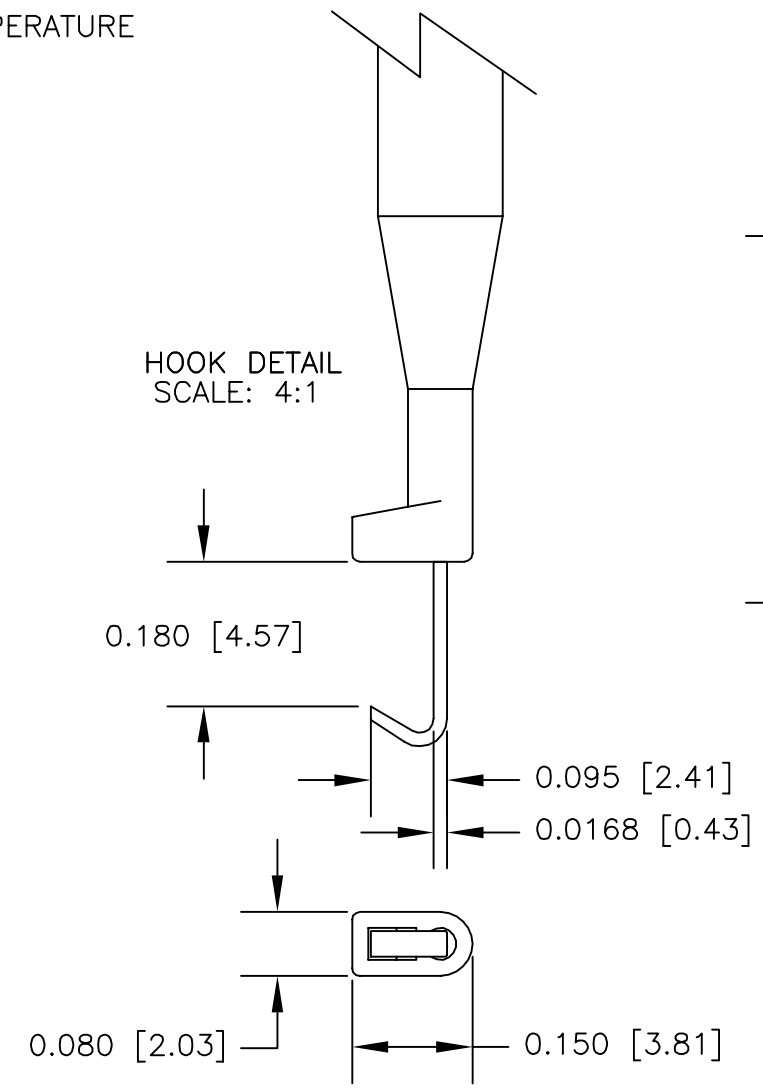

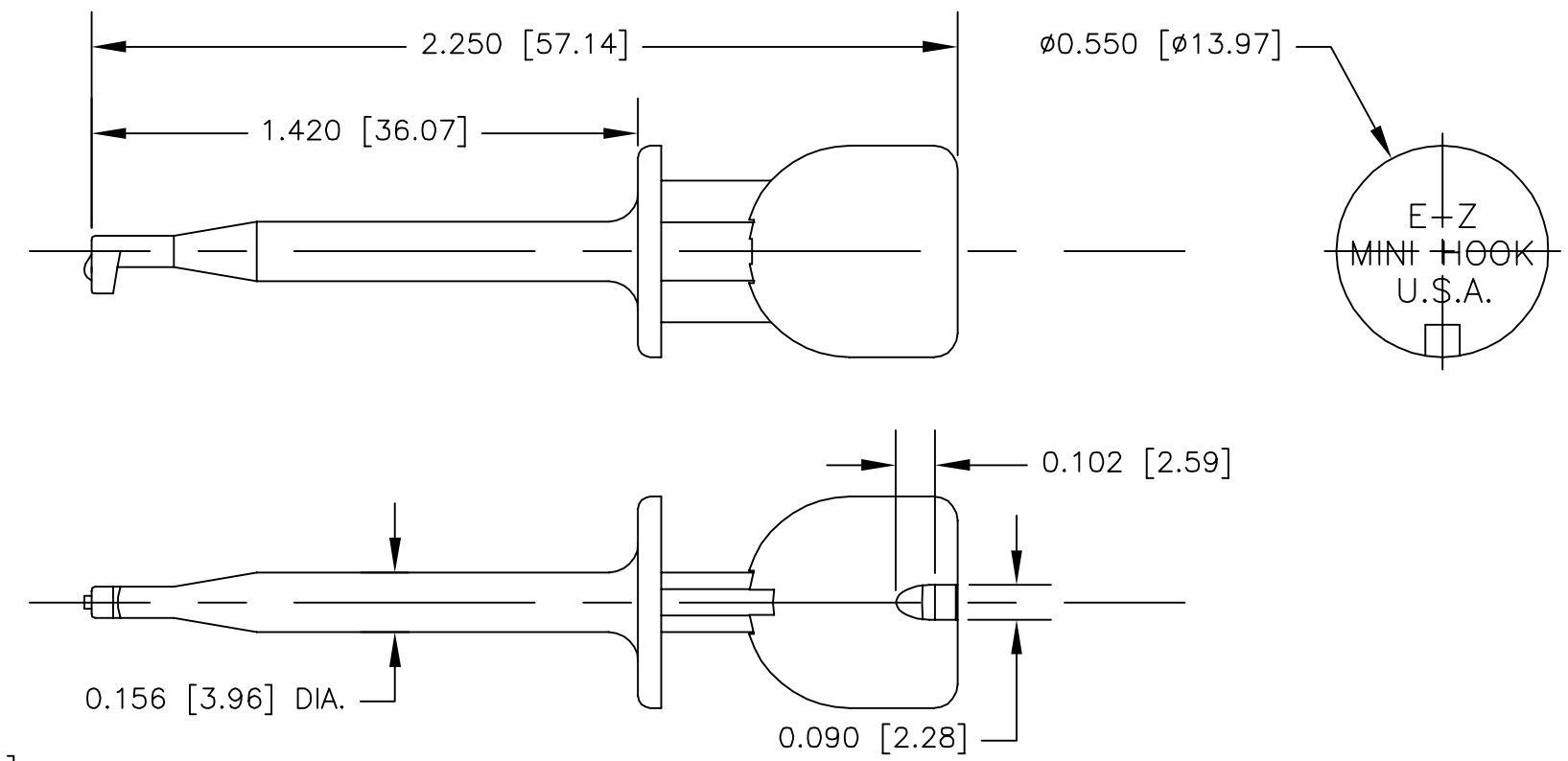

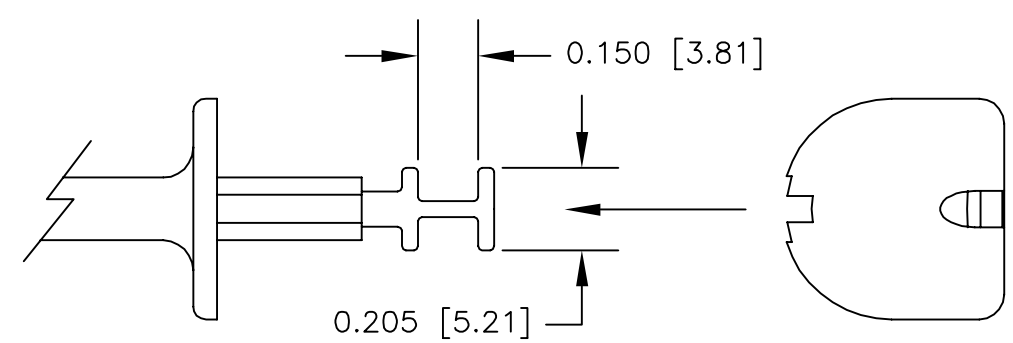

WIRE ATTACHMENT

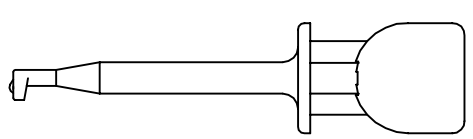

ACTUAL SIZE

		UNLESS OTHERWISE SPECIFIED DIMENSIONS ARE IN INCHES TOLERANCES ARE: FRACTIONS ± DECIMALS .XX ± .XXX ± ANGLES ±	CONTRACT NO.	E-Z-HOOK® DIVISION OF TEKTEST INC. ARCADIA, CA 91006 U.S.A.
			APPROVALS / DATE	
			DRAWN R.L. 6/09	DESCRIPTION
		MATERIAL SEE NOTE.	APPROVED BY	E-Z-MINI-HOOK TEST CONNECTOR
		FINISH SEE NOTE.		SIZE B / CODE IDENT NO. 08505 / DRAWING NO. X100W / REV.
NEXT ASSY	USED ON			
APPLICATION		DO NOT SCALE DRAWING		SCALE 2:1 / SHEET 1 OF 1

THE INFORMATION CONTAINED IN THIS DOCUMENT IS PROPRIETARY TO E-Z-HOOK. THE INFORMATION IS NOT TO BE REPRODUCED WITHOUT PRIOR WRITTEN PERMISSION OF E-Z-HOOK, DIV. OF TEKTEST INC.
MAXIMUM TESTED RATINS IN A HANDS-FREE CONTROLLED ENVIRONMENT. MAXIMUM RATINGS ARE NOT TO BE USED CONCURRENTLY.