DRAWING MADE IN THIRD ANGLE PROJECTION

566269-1 ⇔ 566269-1

/home/us016926/DMTECmod

PART NUMBER	REV	FIRST USED
566269-1	N	1-471273-2

△1 RECOMMENDED SPARE PARTS.

△2 ITEMS NOT SHOWN.

△3 SUPPLY WITH ITEM 72

4. CONTACT TERMINAL PRODUCT ENGINEERING FOR CRIMP HEIGHTS FOR SPECIFIC WIRE COMBINATIONS.

△5 FOR SET-UP ONLY.

△6 SUPPLIED WITH ITEM 71.

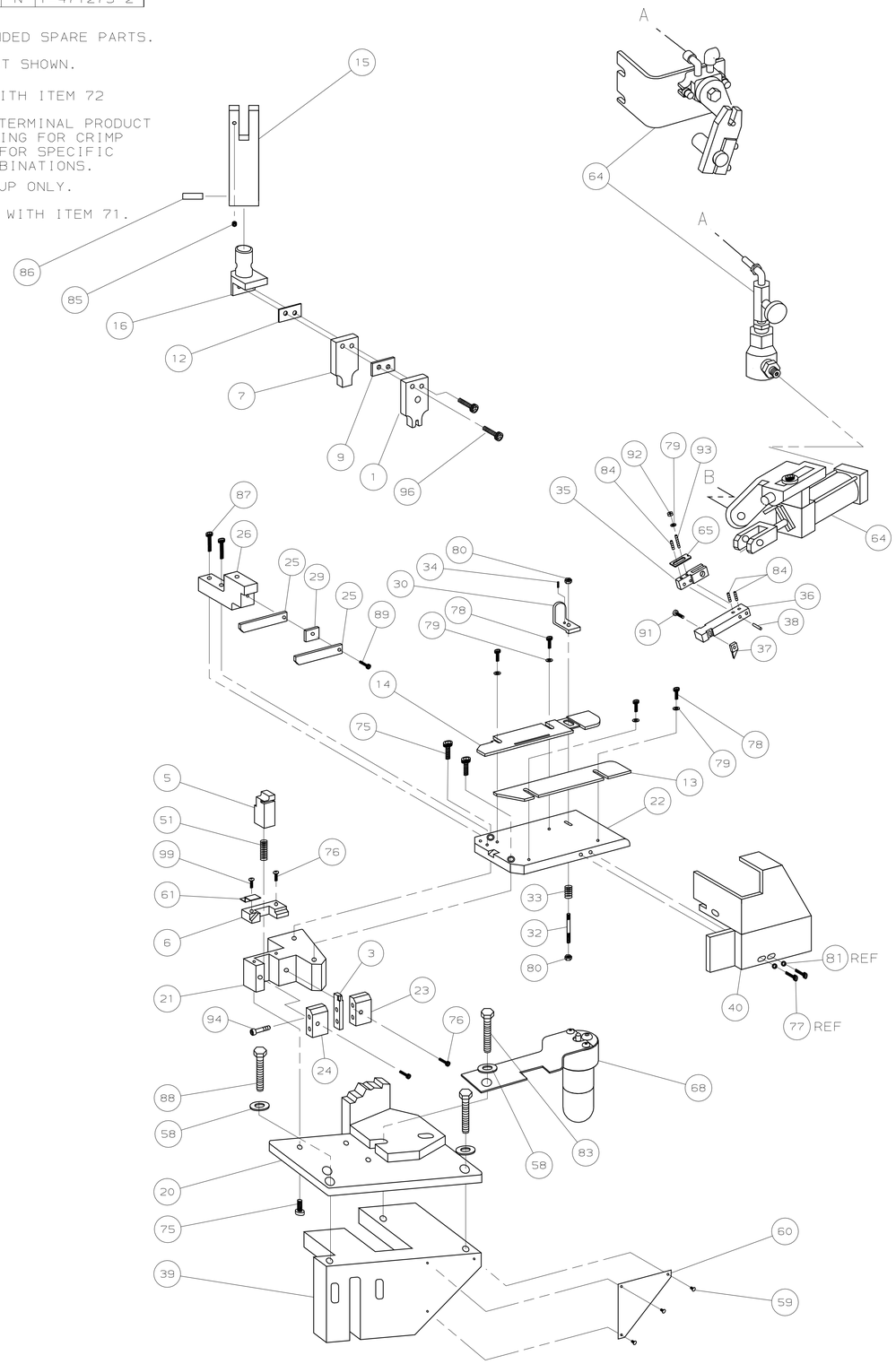

TERMINAL NAME: SPLICE		
		62754
TERM APPL SPEC 114-2088		

CRIMPING DATA	
CRIMP HEIGHT	WIRE SIZE
.115	(4)16 △5
.132	(2)12
-	-
-	-

CRIMP	SIZE	TYPE	RANGE
WIRE	.300	F	10,400-22,900 CMA
INSUL	-	-	-

FEED	APPL INST	SET UP GAGE	LAYOUT
.908	408-8012	-	-

WIRE STRIP LENGTH .360-.400

-1	U/M	DWG SIZE	PART NO	DESCRIPTION	ITEM NO
					129
					128
					127
					126
					125
					124
					123
					121
					120
					119
					118
					117
					116
					115
					114
					113
					112
					111
					110
					109
					108
					107
					106
					105
					104
					103
					102
					101
					100
					99
△6 △2 2		-	A	3-21001-3	SCR, SHC, 3/8-16 X .75	98
△6 △2 2		-	A	3-21001-9	SCR, SHC, 3/8-16 X 2.00	97
2		-	A	21001-7	SCR, SHC 1/4-20 X .25	96
△3 2		-	A	1-21001-0	SCR, SHC, 1/4-20 X 200	95
2		-	A	3-21000-1	SCR, SHC 8-32 X 1.00	94
1		-	A	4-21006-4	SCR, SET, 8-32 X .50	93
1		-	A	21018-6	NUT, JAM, 8-32	92
1		-	A	2-21000-5	SCR, SHC, 8-32 X .25	91
△2 2		-	A	21001-6	SCR, SHC, 1/4-20 X 1.00	90
1		-	A	2-21000-9	SCR, SHC 8-32 X .75	89
2		-	A	3-21015-1	SCR, HEX HD, 3/8-16 X 1.00	88
2		-	A	3-21000-1	SCR, SHC, 8-32 X 1.00	87
1		-	A	7-21029-0	PIN, SLT SPR, ø.312 X 1.62	86
1		-	A	2-21549-3	SCR, SOC SET, 1/4-20 X .25	85
3		-	A	3-21006-8	SCR, SOC SET 8-32 X .125	84
1		-	A	3-21015-3	SCR, HEX HD, 3/8-16 X 1.50	83
						82
REF		-	A	21055-6	WASHER, FLAT, #8	81
1		-	A	21021-4	NUT, HEX, S/L 10-32	80
5		-	A	21055-6	WASHER, FLAT, #8	79
4		-	A	2-21000-6	SCR, SHC, 8-32 X .38	78
REF		-	A	2-21000-6	SCR, SHC, 8-32 X .38	77
4		-	A	3-21000-5	SCR, SHC, 10-32 X .50	76
5		-	A	21001-3	SCR, SHC, 1/4-20 X .62	75
-		-	-	-	-	74

REVISION OF EACH ASSY NO (WHEN BLANK, USE DWG REVISION)

PARTS LIST

-1	U/M	DWG SIZE	PART NO	DESCRIPTION	ITEM NO
-	-	-	-	-	73
△2 1		-	B	465319-2	EXTENSION BASE 30°	72
△2 1		-	A	453602-1	MOUNT BRACKET ASSY 30°	71
-		-	-	-	-	70
						69
1		-	C	465184-8	LUBRICATOR ASSY	68
-		-	-	-	-	67
-		-	-	-	-	66
1		-	A	374999	TENSION ADJ PLATE	65
1		-	D	1-690021-3	AIR FEED ASSY	64
-		-	-	-	-	63
-		-	-	-	-	62
1		-	-	455443-2	DEFLECTOR, CHIP	61
1		-	B	452373-1	PLATE, IDENTIFICATION	60
3		-	A	21017-6	SCR, RH DRIVE	59
3		-	A	371178	WASHER	58
-		-	-	-	-	57
-		-	-	-	-	56
-		-	-	-	-	55
						54
						53
-		-	-	-	-	52
1		-	B	387083	SPRING,SHEAR	51
-		-	-	-	-	50
-		-	-	-	-	49
-		-	-	-	-	48
-		-	-	-	-	47
-		-	-	-	-	46
-		-	-	-	-	45
-		-	-	-	-	44
-		-	-	-	-	43
						42
						41
1		-	D	1-461028-9	GUARD	40
1		-	C	570238	BASE CASTING	39
2		-	B	1-21030-5	FEED FINGER DOWEL PIN	38
1		-	A	811645-1	TIP,FEED FINGER	37
1		-	-	811644-1	FEED FINGER	36
1		-	A	810131	HOLDER,FEED FINGER	35
1		-	A	2-21006-9	SCR, STOCK DRAG, 6-32 X .25	34
1		-	A	373469	SPRING,STOCK DRAG	33
1		-	A	370573	STUD,STOCK DRAG	32
1		-	A	21018-5	NUT,HEX 6-32	31
1		-	B	387650-4	STOCK DRAG	30
1		-	A	692968-6	STRIPPER SPACER	29
						28
						27
1		-	A	692875-4	MOUNT,STRIPPER	26
2		-	A	811266-5	STRIPPER	25
1		-	A	811839-6	AUX ANVIL HOLDER	24
1		-	A	811838-7	ANVIL HOLDER	23
1		-	B	692187-1	PLATE,STRIP GUIDE	22
1		-	C	565076-1	BLOCK,BASE	21
1		-	B	465317-1	PLATE,BASE	20
						19
						18
						17
1		-	C	465325-1	HOLDER,TOOL	16
1		-	B	471167	RAM	15
1		-	B	812767-1	STRIP GUIDE,REAR	14
1		-	B	465320-5	STRIP GUIDE,FRONT	13
1		-	-	854652-8	CRIMP SPACER	12
						11
						10
1		-	C	370570	SPACER	9
						8
1		-	A	456172-4	SHEAR DEP	7
△1 1		-	A	811239-1	PLATE,SHEAR	6
△1 1		-	B	465324-4	SHEAR,FLOATING	5
						4
△1 1		-	B	1-689722-0	ANVIL	3
						2
△1 1		-	C	453930-4	CRIMPER,WIRE	1

REVISION OF EACH ASSY NO (WHEN BLANK, USE DWG REVISION)

QTY REQD PER ASSY

PARTS LIST

P	F	LTR	REVISION RECORD	APP	DATE
		N	ECR-06-011727	TE	5-06
		M	ECN 0150-1026-03	TE	9-03
		L	ECN 0150-0779-03	TE	7-03
		K1	ECN 0150-0334-03	TE	3-03
		K	ECN 0150-1386-02	TE	10-02
		J	ECN 0150-0371-01	TE	4-01
		H	0150-6115-95	CE	5-95
		G	0150-5661-94	CE	8-94

DIMENSIONS IN INCHES.
DO NOT SCALE PRINT.
TOLERANCES UNLESS OTHERWISE SPECIFIED:
2 PLC DEC ±-
3 PLC DEC ±-
4 PLC DEC ±-
ANGLES ± -
SURF TEXTURE: √
REMOVE BURRS, BREAK SHARP EDGES R.015 MAX

MATL	HT TR	FIN
-	-	-
-	-	-

DR D.SALTZER 8-30-94 | APP T.BEDDICK 8-30-94
CHK C ERISMAN 8-30-94 | REL B. MORGAN 8-30-94

AMP Incorporated, Harrisburg, PA 17105-3608

NAME: STD APPLICATOR (30 DEG ROT SPLICE)
MACHINE REF: STD APPL
SCALE 1:4 | D | DWG NO 566269-1 | SHEET 1 OF 1 | REV N

CAGE CODE 00779 | CUSTOMER AND ASSEMBLY DRAWING | RESTRICTED TO —

THIS DRAWING IS A CONTROLLED DOCUMENT.
RELEASED FOR PUBLICATION JUN 26, 1999
© COPYRIGHT 1999 BY AMP INCORPORATED. ALL RIGHTS RESERVED.

LOC A | DIST 4